CR-172114

LMSC-A723517

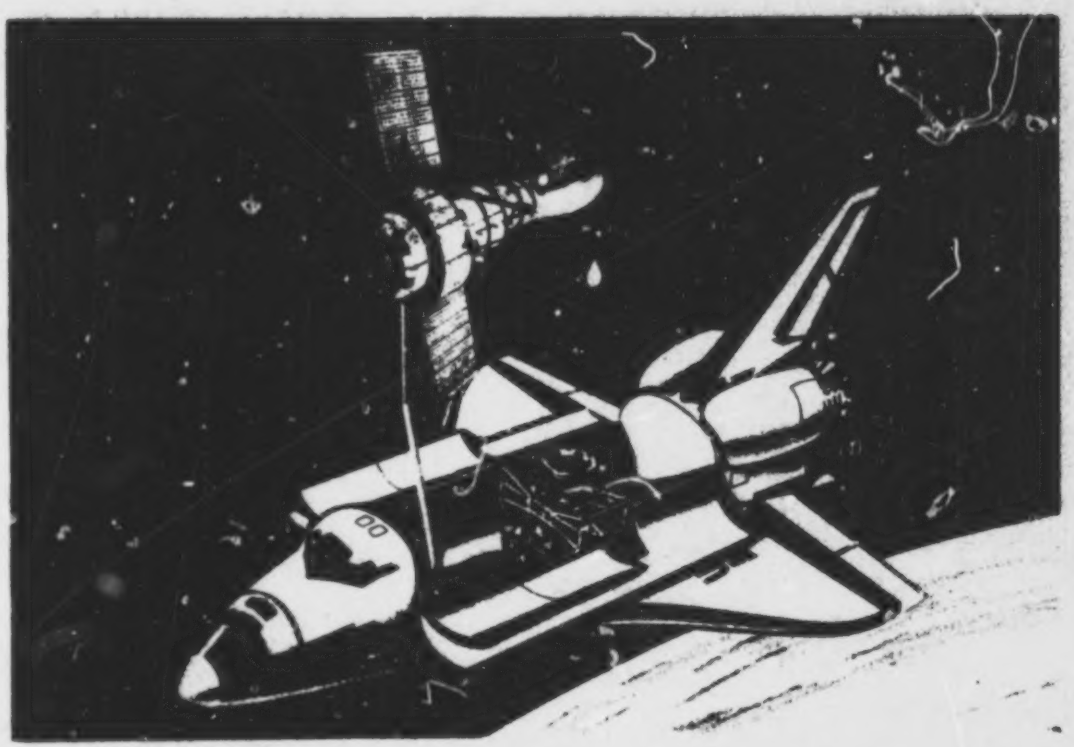

SUPERFLUID HELIUM TANKER STUDY (SFHT)

PROGRAM PROGRESS REPORT

DRD No. MA-125T

JOHNSON SPACE CENTER

9 August 1988

Lockheed Missiles & Space Company, Inc.
Sunnyvale, CA 94088-3504

(NASA-CR-172114) SUPERFLUID HELIUM TANKER STUDY (SFHT) Program Press Report (Lockheed Missiles and Space Co.) 353 p CSCL 22B

N89-24415

Unclas

G3/18 0195478

Forward

This document comprises the Final Report for the Superfluid Helium Tanker (SFHT) conceptual design study as performed by Lockheed Missiles and Space Company, Inc. The study was performed for the Lyndon B. Johnson Space Center under contract NAS9-17853.

TABLE OF CONTENTS

	PAGE
INTRODUCTION	
SYSTEM SCENARIOS	1
OPERATIONAL SCENARIOS	6
USER REQUIREMENTS - TASK 1	9
CONFIGURATION TRADE-OFFS	10
FLUID SUBSYSTEM - OVERVIEW	29
DEWAR CONCEPTS	39
HELIUM II TRANSFER MODEL	44
PRINCIPAL RESULTS FROM TRANSFER STUDIES	53
LIQUID MANAGEMENT	106
SFHT THERMAL MODELING	107
PLUMBING AND OPERATIONS	128
FLUID SUBSYSTEM SUMMARY	163
CONCEPTUAL SYSTEM DESIGN	196
OPERATIONAL SCENARIO	198
STRUCTURAL/GSE SUBSYSTEM	203
AVIONICS	213
INTERFACES	236
EVA	285
SAFETY	319
THERMAL CONDITIONING	325
HELIUM II GROUND LOADING	331
CAUTION AND WARNING	334
COMMONALITY	340
SUMMARY AND CONCLUSIONS	346
	348

INTRODUCTION

LOCKHEED'S OBJECTIVE FOR THIS STUDY IS TO DESIGN THE SUPERFLUID HELIUM TANKER FOR MINIMUM UP FRONT COST, A LOW LIFE CYCLE COST, AND THE MAXIMUM FLEXIBILITY/ADAPTABILITY CONSISTENT WITH THE ABOVE OBJECTIVES.

FLEXIBILITY/ADAPTABILITY ARE ESSENTIAL AS THE USER REQUIREMENTS ARE NOT FIRM, AND THOSE THAT HAVE BEEN SPECIFIED ARE SUBJECT TO CHANGE.

STUDY LOGIC FLOW

THE STUDY LOGIC FLOW STARTED WITH THE COLLECTION AND ANALYSIS OF USER REQUIREMENTS. A CONFIGURATION TRADE-OFF WAS MADE TO DETERMINE THE BASELINE LINE CONCEPT FOR SFHT THAT MOST NEARLY MET ALL OF THE PROGRAM OBJECTIVES. THE NEXT TASK WAS TO DEVELOP THE BASELINE CONCEPT FOR THE FLUID SUBSYSTEM. WITH THIS ACCOMPLISHED THE BASELINE TANKER WAS DESIGNED. THE COMMONALITY TASK HAS BEEN COMPLETED AND THE PROGRAM PLAN AND COST ESTIMATE WILL BE COMPLETED. IPR #3 WILL BE THE FINAL PRESENTATION.

STUDY LOGIC FLOW

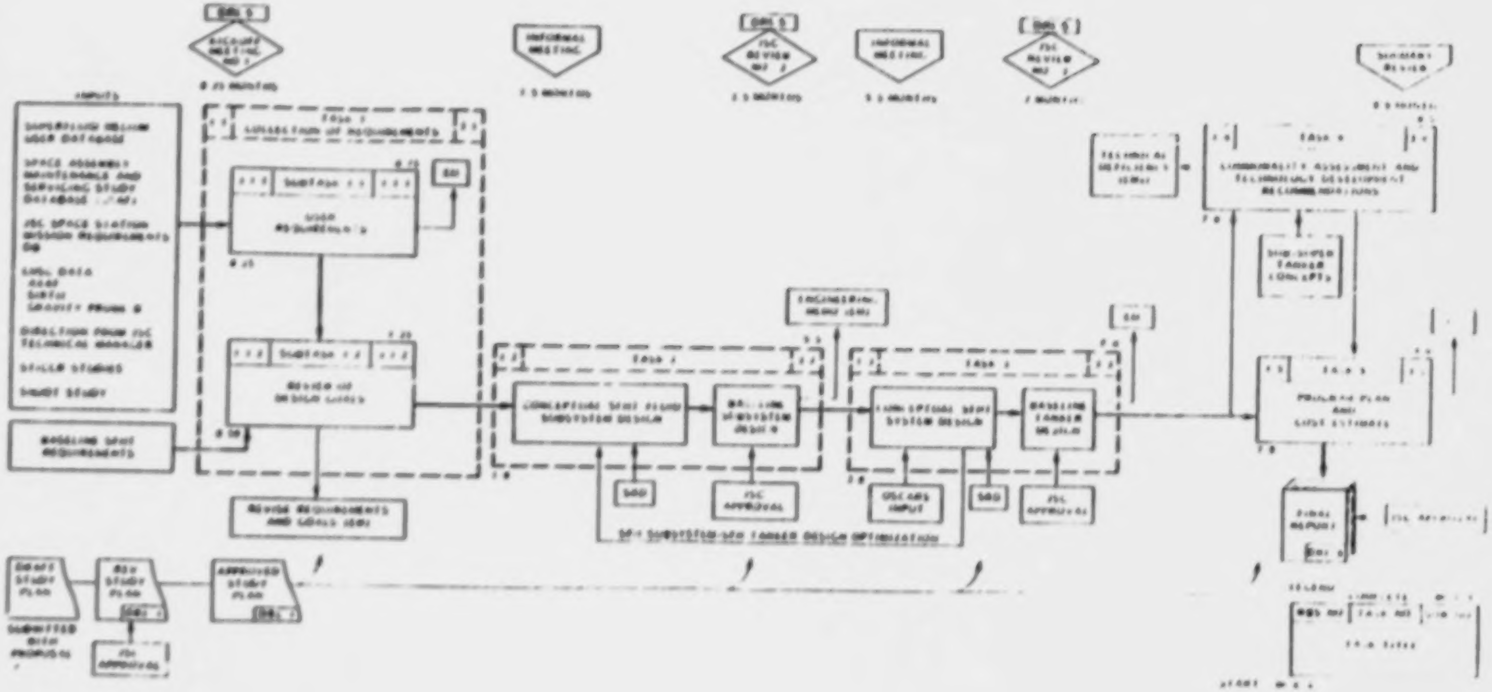

ORIGINAL PAGE IS
OF POOR QUALITY

SUPERFLUID HELIUM TANKER STUDY
TASK DESCRIPTION

TASK 1: USER REQUIREMENTS

1. IDENTIFY SFHT USER REQUIREMENTS
2. REVIEW NASA REQUIREMENTS AND MAKE SUGGESTION AND/OR MODIFICATIONS

TASK 2: CONCEPTUAL SFHT FLUID SUBSYSTEM DESIGN

ANALYSIS AND TRADE-OFFS TO PRODUCE A PREFERRED DESIGN APPROACH

TASK 3: CONCEPTUAL SFHT SYSTEM DESIGN

DESIGN OF ALL SFHT SUBSYSTEMS. AS OPPOSED TO THE FLUID SYSTEM ALONE. OPERATIONS (GROUND, ORBIT, POST LANDING)/SAFETY/CREW (EVA)/AVIONICS, ETC. WILL BE ADDRESSED

TASK 4: COMMONALITY ASSESSMENT AND TECHNOLOGY DEVELOPMENT RECOMMENDATIONS

IDENTIFY ELEMENTS THAT COULD BE USED FOR THE SUPERCRITICAL/SUBCRITICAL TANKERS.

SUMMARIZE TECHNOLOGY DEFICIENCIES FOR FURTHER DEVELOPMENT

TASK 5: PROGRAM PLAN FOR SFHT

PROGRAM PLAN AND COST ESTIMATE

SFHT SCHEDULE

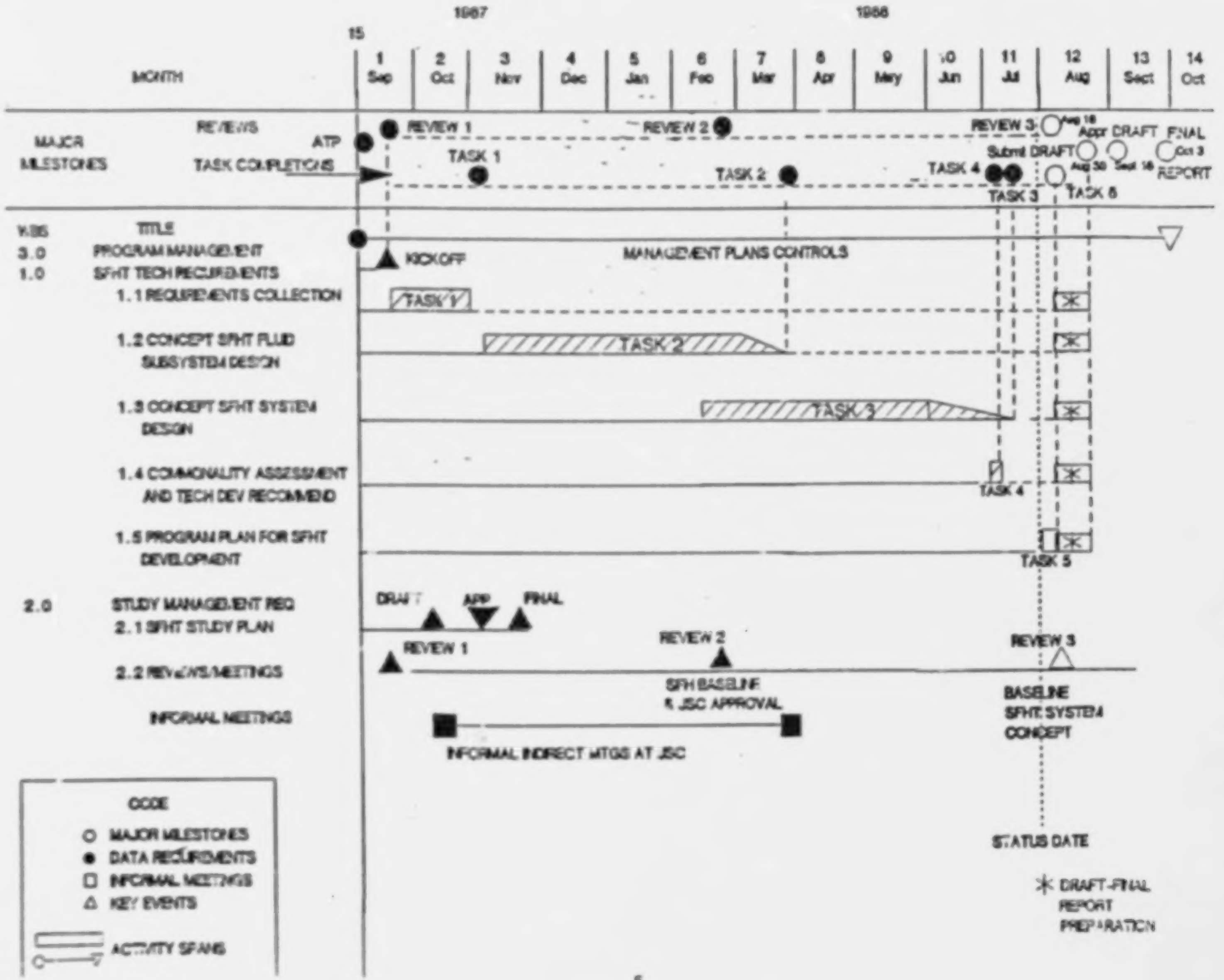

SYSTEM SCENARIOS

PAGE 7 ILLUSTRATION ENCOMPASSES ALL THE POSSIBLE SCENARIOS FOR SUPERFLUID HELIUM RESUPPLY. THE COMPLETE SCENARIOS INCLUDE GROUND, LAUNCH, ORBITAL OPERATIONS, AND RECOVERY.

FOR THIS STUDY WE WILL CONCENTRATE ON THE SCENARIOS SHOWN ON PAGE 8.

SCENARIOS

THE SCENARIOS THAT WILL BE ADDRESSED ARE THE DELIVERY OF THE TANKER TO THE SPACE STATION;

RESUPPLY AT THE SPACE STATION OR ORBITER EITHER BY THE FREE FLYERS OR TRANSPORTED BY THE OMV;

FINALLY, IN-SITU RESUPPLY BY OMV USING THE SPACE STATION OR ORBITER AS THE SUPPLY DEPOT

SFHT

SYSTEM SCENARIOS

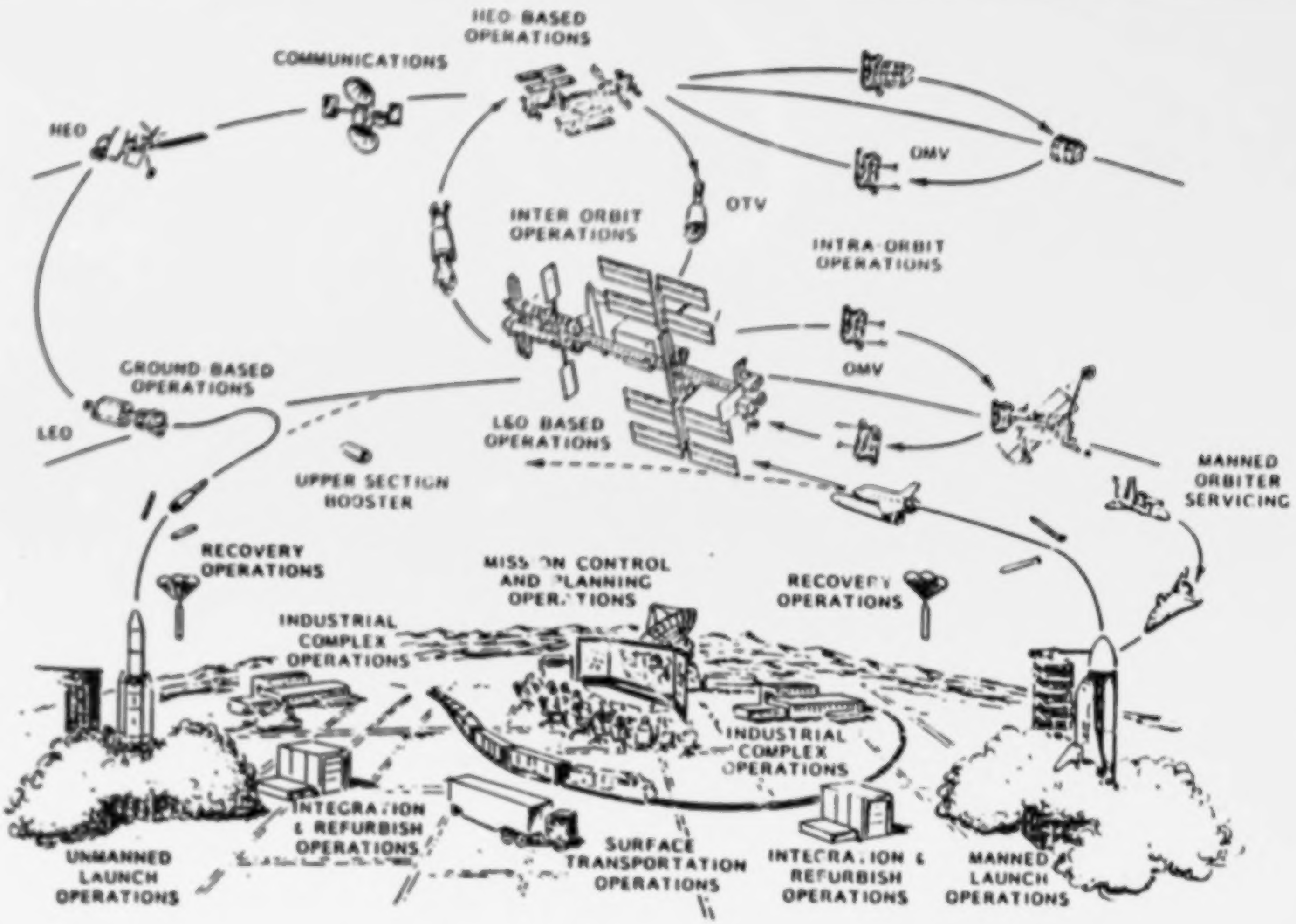

ORIGINAL PAGE IS OF POOR QUALITY

SFHT

SCENARIOS

- DELIVERY TO SPACE STATION
  - ORBITER
  - ELV/OMV
- RESUPPLY AT SPACE STATION
  - OMV
  - FREE FLYER
- RESUPPLY AT ORBITER
  - OMV
  - FREE FLYER
- IN-SITU BY OMV
  - SPACE STATION DEPOT
  - ORBITER DEPOT

SFHT

OPERATIONAL SCENARIOS

SFHT OPERATIONS

- GROUND FILL AND CHECK
- LAUNCH/ASCENT
- ORBIT
- HEALTH CHECKS
- EVA/IVA
- TRANSFER -- COOL/WARM
- TANKER SECURE AND SAFING
- REENTRY
- DESERVICING

USER REQUIREMENTS

TASK 1

SFHT

TASK 1 - USER REQUIREMENTS

- Objective : Provide User Requirements & Design Goals for a Baseline SFHT Design Concept
- Plan :
  - Collect/update requirements in Table 1 SOW (subtask 1.1)
  - Identify additions & changes to Table 1 SOW
  - Emphasize AXAF & SIRTF during flowdown of requirements for various helium users
  - Update Table 2 from the SOW (subtask 1.2)
  - Updated requirements were reviewed with NASA at first informal review

SFHT

SUBTASK 1.1
COLLECTION OF REQUIREMENTS

1.1 USER REQUIREMENTS (TABLE 1)

- SOURCES FOR VARIETY OF USERS
  - MISSION REQUIREMENTS DATA BASE (MRDB) JAN 1987
    - RFP BASELINE ISSUE
  - STUDIES
    - STICRR SIRTF
    - SHOOT PRELIMINARY DESIGN REVIEW (AXAF, SIRTF, ASTRO, LDR, LAMBDA, MAT. FAC.)
  - REPORTS
    - TR 86-039 LHSR-SWALES DEC 1986 (ORIG 12)
    - TR 87-043 TRADEOFFS-SWALES OCT 1987
  - IN-HOUSE SOURCES
    - SDI

SFHT

ENGINEERING MEMO NO. 1 USER REQUIREMENTS AND DESIGN GOALS

- ENGINEERING MEMO (EM) SFHT-1 DOCUMENTS THE RESULT OF TASK 1
- TABLE 1, HE1/HE 11 CRYOGEN USER DATABASE, REPRESENTS A CURRENT UPDATE OF TABLE 1 IN THE SOW
- DATA FROM 20 CATEGORIES (VOLUMETRIC QUANTITY, SERVICE INTERVALS, LAUNCH DATES, AND ORBITAL PLACEMENT) INFLUENCED SELECTION
- TWELVE UNDERLINED USERS DO NOT DIFFER SIGNIFICANTLY FROM SOW AND SWALES
- FOUR POSSIBLE SDI USERS HAVE BEEN IDENTIFIED

SFHT — ENGINEERING MEMO NO. 1 USER REQUIREMENTS AND DESIGN GOALS (CONTINUED)

TABLE 1 INDICATES THAT A FLEXIBLE AND ADAPTABLE DESIGN CONCEPT IS NEEDED TO ACCOMMODATE:

- OPTIMIZATION OF UP-FRONT AND LIFE CYCLE COSTS
- MULTITUDE OF USERS (20)
- VARIOUS RANGE OF AMOUNTS
- FREQUENCY OF SERVICING
- SERVICE PERIODS
- MEANS OF DELIVERY
- AVAILABILITY OF DELIVERY
- UNCERTAINTY IN DATABASE
  - LACK OF FIXED DATA IN DATABASE
  - LACK OF TRAFFIC MODELING

TABLE 1 He I/He II USER DATABASE

REVISON A

ITEM	PROGRAM DESIGNATION	USER	HELIUM VOLUME (L)	HELIUM PHASE	SERVICE INTERVAL (DAYS)	SERVICE TIME (DAYS)	ORBIT (KM)	LAUNCH DATE	MISSION LIFETIME (YRS)	INCLINATION (DEG)	PROGRAM STATUS	MASS (kg)	POWER (kW)	ORBITAL PLACEMENT SS	ORBITAL PLACEMENT FF	ORBITAL PLACEMENT CP	ORBITAL PLACEMENT POP	SERVICES INITIALLY	SERVICES SUBSEQUENT	COMMENTS
1	--	LAMBDA EXPERIMENT	100	He II	--	1-7*	ON SHUTTLE	1995*	--	TBD	PLANNED	--	--	--	--	--	--		SS	SUBSEQUENT PART OF LPFF ON SS, SEE ITEM 6 (LM)*
2	[illegible]	GRAVITY PROBE B	1600	He II	730	14	650	1994	1-2	90	PLANNED	1,460	0.14	--	X	--	--	NONE		PRESENTLY NOT DESIGNED FOR ON ORBIT SERVICING
3	[illegible]	AXAF SERVICING	200	He II	730	TBD*	600	1996*	15	28.5	PLANNED	13,500	0.6	--	X	--	--	SS	SS	NONE
4	[illegible]	SIRTF SERVICING	4000	He II	730	3-14	600	1997*	6-12	28.5	PLANNED	4,690	0.6	--	X	--	--	SS	SS	NONE
5	[illegible]	IR TELESCOPE IN SPACE	450	He II	180	7	400	1996	2	28.5	CANDIDATE	1,500	0.7	--*	X*	--	--	SS		2ND FLIGHT IS FF*
6	LCMM 1/01, 1/04, 1/41	MMPSF/LPFF	200	He I/II	90	1-7	400	1996	5	28.5	PLANNED	TBD	TBD	X	--	--	--	SS	SS	ON SS, SEE MMPF DATABASE NAS 8-36122 (LM)*
7	SAAB0121	ASTROMAG	4600	He II	730	TBD	400	1996	10-15	28.5	PLANNED	6,000	1.5	X	--	--	--	SS	SS	IN SITU SERVICING (AP)*
8	TIMB2542	TETHERED CONSTELLATION	1000	He I	180	TBD	400	1996	TBD	28.5	CANDIDATE	14,000	1.0	X	--	--	--	SS		TETHERED PLATFORM TO SS
9	SAAB279	CRYOGENIC INTERFEROMETER SPECTROMETER	2400	He I/II	[illegible]	TBD	825	1996	TBD	98.25	PLANNED	800	0.12	--	--	--	X	POP		SECOND EOS PAYLOAD (ORU) NASA TM 86129 APPLIES. MAY USE MECH REFRG IN PLACE OF CRYOGEN.
10	SAAB231	SUBMILLIMETER SPECTROMETER	560	He I/II	730	TBD	825	1996	5	98.25	PLANNED	500	0.10	--	--	--	X	POP	POP	PART OF EOS PLATFORM NO. 2.
11	S001, S002, S010	ASTRO PLATFORM	2160	He I/II	180	TBD	400	1996	TBD	28.5	CANDIDATE	2,000	5	X*	X*	X	--	IN SITU/ OMV		NONE.
12	SPAN01	FAR IR/SUBM SPACE TELESCOPE	6000	He II	730	TBD	500	1997	4-6	28.5	CANDIDATE	2,500	2	--	X	X	--	IN SITU/ OMV		ALSO 750L LH_2 PLACED BY OMV.
13	S010	SUBM TELESCOPE	250	He I	180	7	400	1998	TBD	28.5	CANDIDATE	320	1.5	--*	X*	--	--	SS		SUBSEQUENT ON ASTRO PLATFORM, SEE ITEM 11.
14	--	SUPERCONDUCTING MAGNET FACILITY	500	He I/II	90	TBD	400	1998	5	--	TBD	TBD	TBD	X	--	--	--	SS	SS	NONE (AP)*
15	SAAB114	PLANETARY IR TELESCOPE	500	He II	180	TBD	500	1999	6-10	28.5	CANDIDATE	TBD	TBD	--	X	--	--	SS	--	VIA OMV
16	SAAB0020	LDR	7000	He II	730	TBD	700	2000	15-20	28.5	PLANNED	50,000	7		X	--	--	SS/OMV		TRANSPORT BY OMV TO SS, ALTERNATE RESUPPLY IN SITU.
17	SDI	SPACEBASED LASER	260 EA	He*	1825						CANDIDATE									NONE
18	SDI	SPACE SURVEILLANCE TRACKING SYS	4000	He*	730-1095						PLANNED									NONE
19	SDI	CHEMICAL LASER	4000	He*	1825						CANDIDATE									NONE
20	SDI	FREE ELECTRON LASER	1000	He*	1095-1825						CANDIDATE									ALSO 17,000 L LH_2 AND 11,000 L LO_2

REFERENCES:

1. MISSION REQUIREMENTS DATA BASE (MRDB), RFP BASELINE ISSUE, JANUARY 1987
2. NASA SPACE SYSTEMS TECHNOLOGY MODEL, NASA TM88174, SIXTH EDITION, JUNE 1985
3. INTRODUCTORY REPORT ON SPACE STATION BASED LIQUID HELIUM SERVICING FACILITY, SUSAN H. BREON, SWALES & ASSOCIATES, TECHNICAL REPORT 86-039, DECEMBER 1986 NAS5-28554 GSFC
4. TRADEOFF STUDY FOR A SPACE STATION BASED LIQUID HELIUM SERVICING FACILITY, S. BREON, C. TELERI, SWALES & ASSOCIATES, TECHNICAL REPORT 87-043, OCTOBER 1987, NAS5-28554 GSFC.

-- = NOT APPLICABLE
LM = LABORATORY MODULE
AP = ATTACHED PAYLOAD
* = REVISION A CHANGE

ORIGINAL PAGE IS OF POOR QUALITY

SFHT

SUBTASK 1.2
REVIEW OF DESIGN GOALS

REVIEW OF DESIGN GOALS PROVIDES BASELINE FLUID SUBSYSTEM OF SFHT

TABLE 2 REFLECTS FLOWDOWN FROM TABLE 1

THIS SUBTASK IS ALSO SUMMARIZED IN EM-1

TABLE 2: BASELINE SFHe DESIGN GOALS

ITEM	REQUIREMENT	DRIVERS
1. FLUID QUANTITY RESUPPLLIED COLD 4800 L + COOLDOWN OF LINES + BOIL OFF WARM 4800 L + 5000 L FOR RESUPPLY COOLDOWN + TRANSFER LINES COOLDOWN + BOIL OFF	4800 L OF SUPERFLUID HELIUM IS TO BE RESUPPLIED. THIS DOES NOT INCLUDE THE FLUID QUANTITY NECESSARY FOR COOLDOWN OPERATIONS OR BOIL OFF. THE STICOR STUDIES ESTIMATE AN ADDITIONAL 5000 L COOLDOWN REQUIREMENT FOR SIRTF. NOTE: RESUPPLY FOR LARGE VOLUME USERS MAY BE ACCOMPLISHED WITH MULTIPLE TANKERS OR TANKS SHOULD TRADE STUDIES INDICATE AN ADVANTAGE. THE RESUPPLY OF MULTIPLE USER DURING THE SAME MISSION IS ALSO A DESIGN GOAL.	SIRTF, LDR/YR
2. RESUPPLY FLOW RATE	1-800 L/HR IS REQUIRED WITH 1000 L/HR MAX AS A DESIGN GOAL. THE FLOW RATE SHALL BE VARIABLE FROM 1 L/HR.	EVA, OMV
3. GAUGING ACCURACY	A FLOW GAUGING ACCURACY OF 25 L/HR - 200 L/HR 10% - 1% 200 L/HR - 1000 4% - 1% OF THE FLUID TRANSFERRED AND A MASS GAUGING ACCURACY OF 1% OF THE FLUID TRANSFERRED IS REQUIRED.	MISSION OPERATIONS
4. GROUND HOLD TIME	a. ORBITER - PRIMARY LOADING OF THE SFHT COULD OCCUR AS EARLY AS 48 DAYS PRIOR TO NOMINAL LAUNCH, IF THE NBP HELIUM GUARD TANK IS TOPPED OFF IN THE PCR (SEE FIG. 1). THIS WOULD ALLOW 20 DAYS TO NOMINAL LAUNCH, A 21 DAY POSSIBLE PAD HOLD AND A MAXIMUM OF 7 DAYS ON ORBIT BEFORE VENTING OR SERVICING. b. ELV HOLD TIME IS VEHICLE SPECIFIC c. SPACE STATION HOLD TIME IS 90 DAYS IN THE SERVICING FACILITY. IT IS POSSIBLE, BECAUSE OF SIRTF ORBITAL NODE ALIGNMENT PROBLEMS, THAT THE SPACE STATION HOLD TIME REQUIRED WOULD BE EXTENDED TO NINE MONTHS. 9 MO HOLD WITH LOSS 10%	a. 21-DAY PAD HOLD b. NO DRIVER c. ORBIT PLANE ALIGNMENT
5. VENTING	SFHT MUST BE CAPABLE OF SUPPORTING SAFE VENTING REQUIREMENTS DURING ALL MISSION PHASES. ALL VENTING MUST BE NON-HAZARDOUS, NON-CONTAMINATING, AND NON-DESTRUCTIVE.	SAFETY AND MISSION SUCCESS

FREE FLYERS FROM SPACE SHUTTLE

- THE FIGURE, FREE FLYERS FROM SPACE SHUTTLE, SHOWS THE SERVICING FOR 8 BASIC FREE FLYER MISSIONS TAKEN FROM THE LIST OF 12 CANDIDATE HELIUM USERS.
- THEIR LAUNCH DATES (1994 THROUGH 2000) AND SERVICE INTERVALS (6 TO 24 MONTHS) ARE TAKEN FROM TABLE 1 AND SHOW THE INCREASING TOTAL AMOUNTS FOR SIX MONTH INTERVALS OF SUPERFLUID HELIUM NEEDED STARTING IN THE YEAR 1996 AND PROGRESSING TO 2003.
- FOR THE 44 SERVICING EVENTS, THE HORIZONTAL LINES PROVIDE INDICATIONS OF HOW MANY MISSIONS CAN BE SERVICED DEPENDING ON QUANTITY OF SHE CARRIED BY THE TANKER.
- NOTE THAT 40 OF 44 SERVICING EVENTS CAN BE ACCOMPLISHED WITH A TANKER OF 5K LITERS OR LESS.
- 33 USERS CAN BE SERVICED WITH A TANKER CAPACITY OF 1K LITERS OR LESS.

SFHT

FREE FLYERS FROM SPACE SHUTTLE

(44 SERVICING EVENTS)

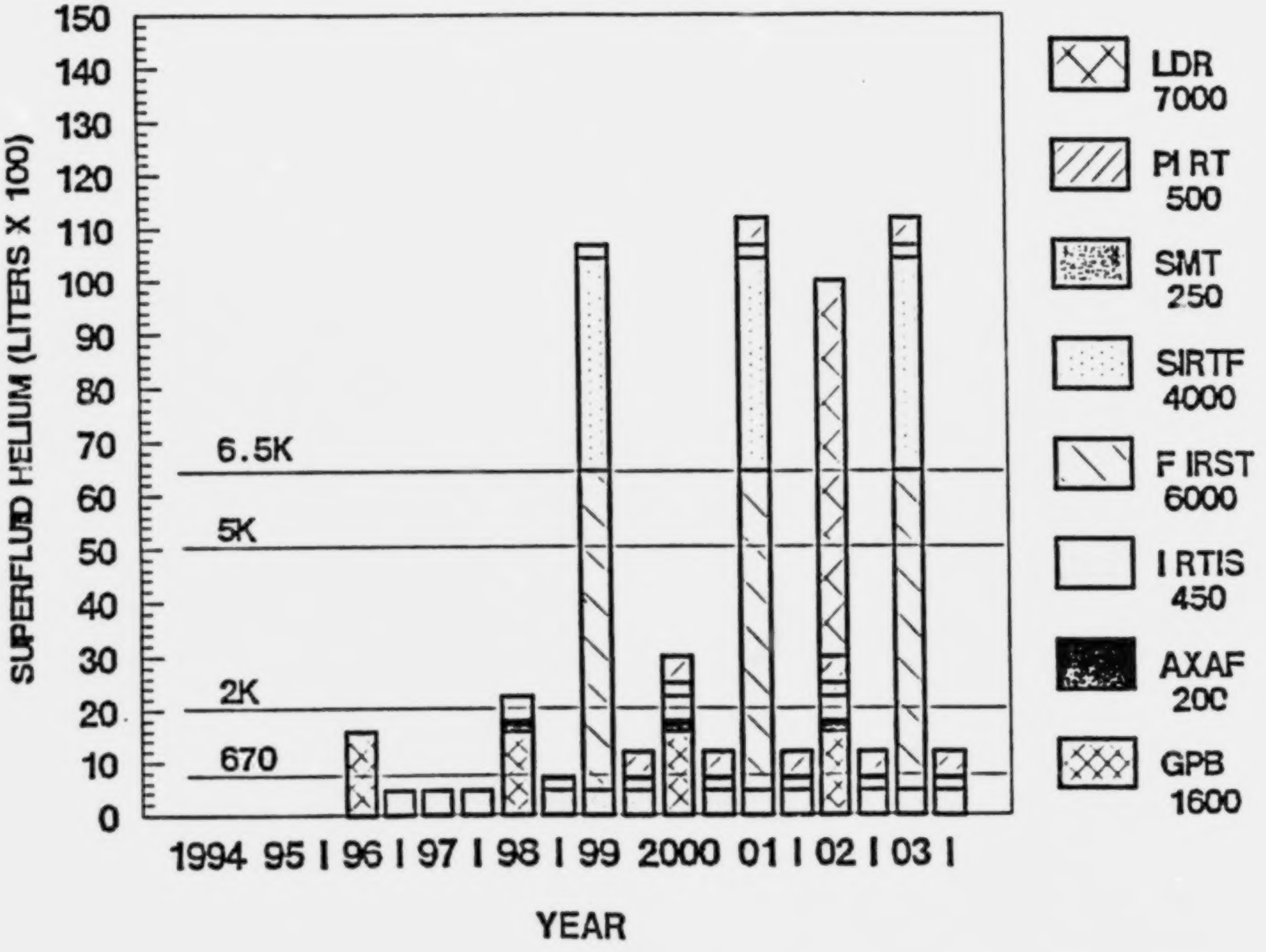

- THE NEXT TWO CHARTS SHOW SPACING OF SPACE STATION RESUPPLY USERS IF 10,000 OR 13,000 LITER TANKS ARE AVAILABLE
- THESE SWALES STUDY EXTRACTS INDICATE THAT ALL 12 USERS - FREE FLYERS, ATTACHED PAYLOADS AND LAB MODULE EXPERIMENTS - CAN BE SERVICED (DEPENDENT ON THE SERVICING OPTION UTILIZED)
- THIS MODEL DOES NOT CONSIDER THE AVAILABILITY OF SERVICING BAYS OR THE ORBITAL MECHANICS THAT INFLUENCE THE USER RESUPPLY INTERVAL

SFHT 10,000 L DEWAR AT SPACE STATION

(from Swales Tradeoff Study)

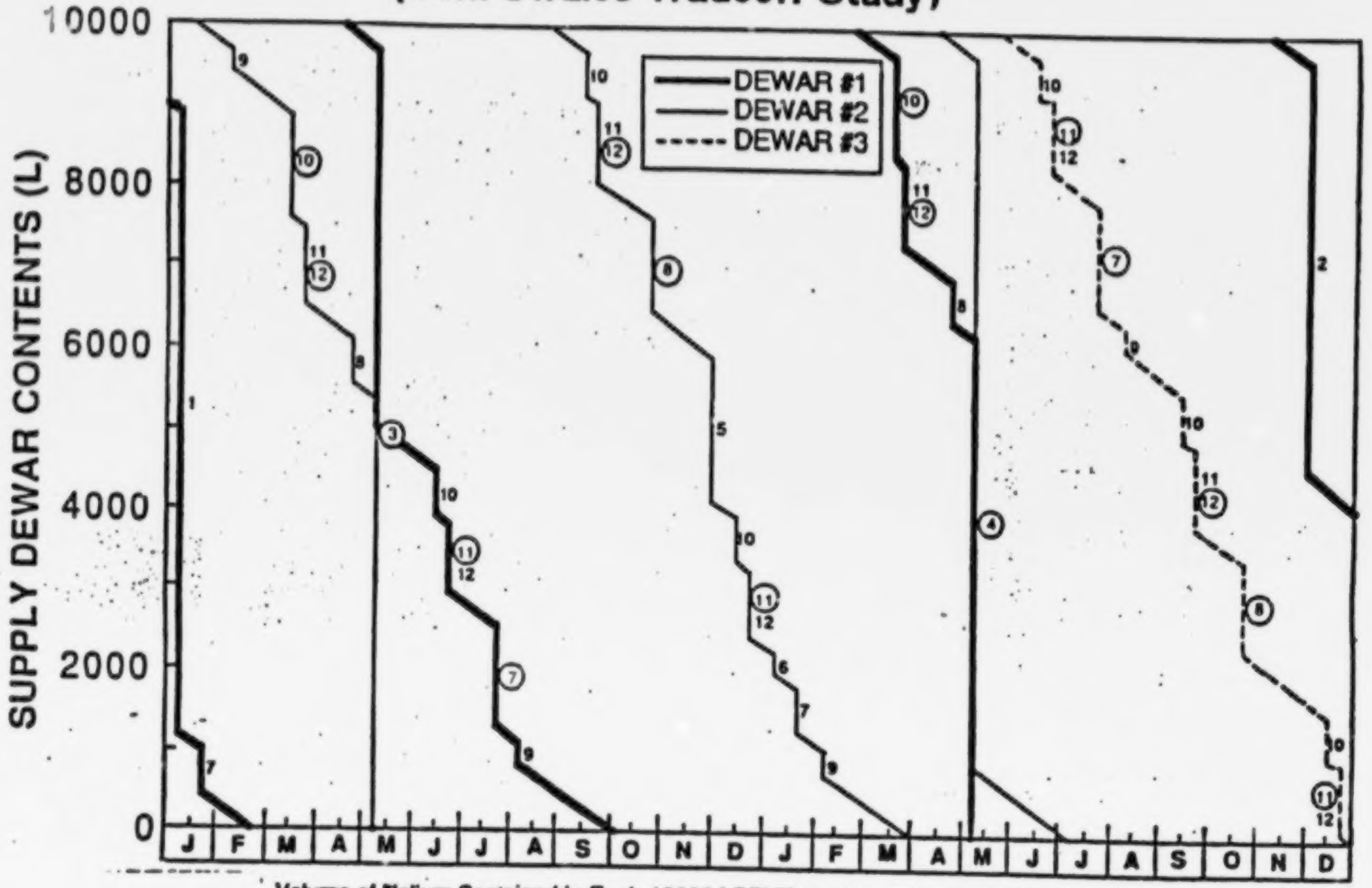

Volume of Helium Contained in Each 10000 l SFHT (Option 1) for the Full Complement of Users

SFHT 13,000 L DEWAR AT SPACE STATION

(from Swales Tradeoff Study)

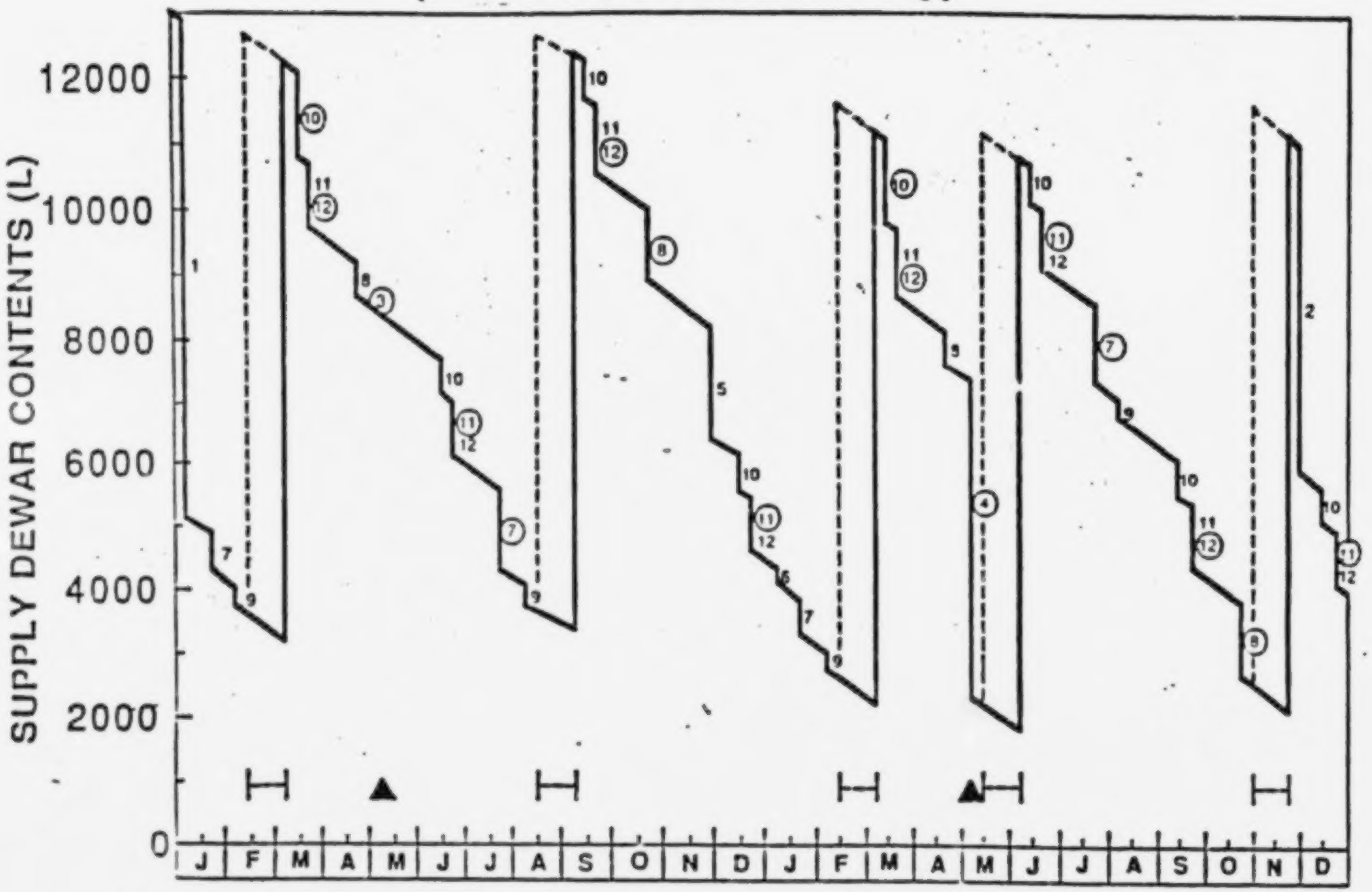

Volume of Helium Contained in the 13000 l SFHT (Option 2) for the Full Complement of Users

SFHT

EM-1 USER REQUIREMENTS AND DESIGN GOALS (CONT)

- These criteria led to selecting a baseline 5000 liter SFHe II dewar (5250 physical capacity)

- It will accommodate :
  - The flexibility inferred
  - The servicing of,
    - 18 of 20 users (200 to 4800 liters)
    - All 20 users from two 5000 liter dewars

- Later events can influence criteria/sizing

SFHT

EM-1 USER REQUIREMENTS AND DESIGN GOALS (CONT)

- Table 2, Baseline SFHe Design Goals, considers warm, cooldown, transfer and boil off conditions
- SHOOT is reflected in flow rates and gauging accuracies
- Pad Hold times were established for Orbiter* and boil-off allowance for Space Station
- Venting includes safety considerations

*New requirement as of 2-8-88, see next chart

SFHT

EM-1 USER REQUIREMENTS AND DESIGN GOALS (CONT)

Pad Hold Time (per telecon: Ed Oscar, KSC, 2/8/88)

Time (days)	Event
- 12	Load into Orbiter
- 10	Close Orbiter Bay doors
0	Nominal launch
+ 3	Maximum Hold on Pad time/late launch
+ 5	Orbiter Bay door re-opened/begin resupply
17	Total SFHT Hold Time

Note: Nominal venting into cargo bay may be permitted

SFHT

ENGINEERING MEMO NO. 2
PROPOSED ORBITER VENT LINES

- Proposed generic vent lines in the Orbiter stem from a need to increase vent rate capability for safety considerations

- The SHOOT experiment utilizes existing 3/4 inch emergency vent lines and is allowed to vent within the Orbiter bay

SFHT

EM–2 PROPOSED ORBITER VENT LINES (CONTINUED)

- THE INSULATED LINES ORIGINATE FROM A 5 in. CIRCULAR VENT AT X_0 1295, Z_0 331 AND EXTEND TO THE FORWARD BULKHEAD BELOW THE CARGO BAY DECK

- THE TWO GENERIC VENT LINES (PORT AND STARBOARD) ARE 2–in. DIAMETERS

- THESE STAINLESS STEEL "PIPES" ARE JOINED BY MARMON TYPE CLAMPS IN TBD LENGTHS

- THE LINES TERMINATE AT STANDARD INTERFACE PANELS

- LMSC SUGGESTS THE NEED FOR INSULATED LINES

EM-2 PROPOSED ORBITER VENT LINES

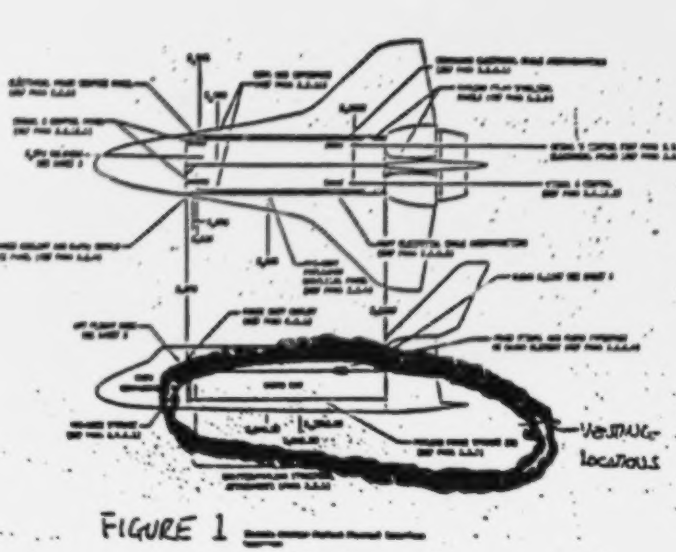

FIGURE 1

Reference only

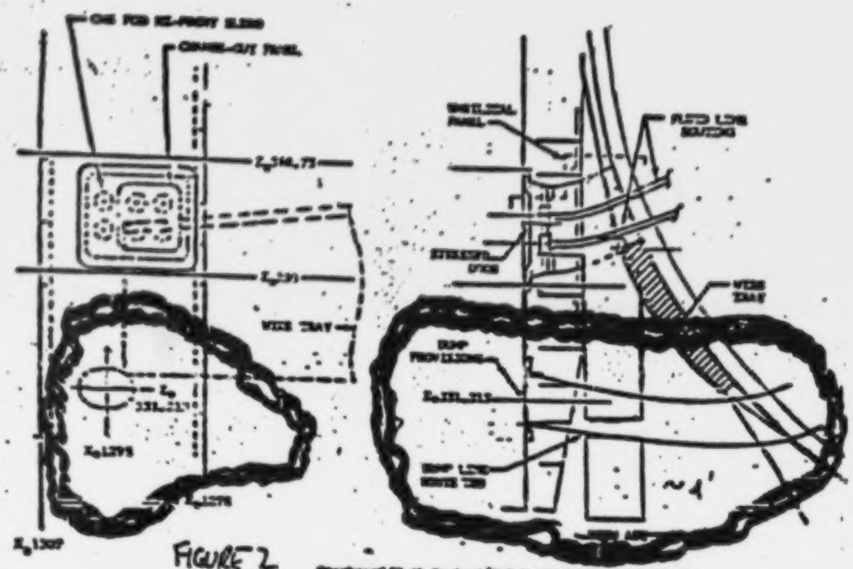

FIGURE 2

Reference only

ORIGINAL PAGE IS OF POOR QUALITY

THIS FIGURE IS AN EXTRACT FROM EM-2 AND SHOWS TWO FIGURES THAT REPRESENT THE GENERAL LOCATION OF THE PROPOSED ORBITER VENT LINES.

CONFIGURATION TRADE-OFFS

SFHT TANKER(S)

THE REQUIREMENTS FOR THE SFHT TANKERS ON THE SPACE STATION VS THE ORBITER/OMV ARE DIFFERENT ENOUGH TO SUGGEST THAT THERE BE TWO TANKERS, EACH OPTIMIZED FOR THE SPACE STATION AND ORBITER. PAGE 31 SHOWS THE MOST IMPORTANT DIFFERENCES.

TANK GEOMETRY

DIFFERENT DEWAR CONFIGURATIONS AND SIZES DRAWN ON PAGE 32 WERE EXAMINED TO PROVIDE CONCEPTS FOR THE SELECTION OF A DEWAR SIZE AND SHAPE. NOTE THAT THESE ARE INTERNAL DEWAR DIMENSIONS WHICH INCLUDE FIVE PERCENT EXTRA CAPACITY FOR ULLAGE. EXTERNAL TO THESE DEWARS ARE THE VACUUM COOLED SHIELDS, MLI, PLUMBING, COMPONENTS, AND VACUUM SHELL.

SFHT

SFHT TANKER(S)

A HORSE OF A DIFFERENT COLOR

SPACE STATION

- LOW BOIL-OFF REQUIRED FOR 9-MONTH LIFE
- BERTHING ADAPTER AND ORU CARRIER NOT REQUIRED
- INTEGRATED DEMAND IS LARGE

ORBITER

- BOIL-OFF IN 7 DAYS NOT CRITICAL
- BERTHING AND ORU CARRIER REQUIRED
- 40 OUT OF 44 SERVICING EVENTS REQUIRE LESS THAN 5000 LITERS TO BE SUPPLIED

SFHT

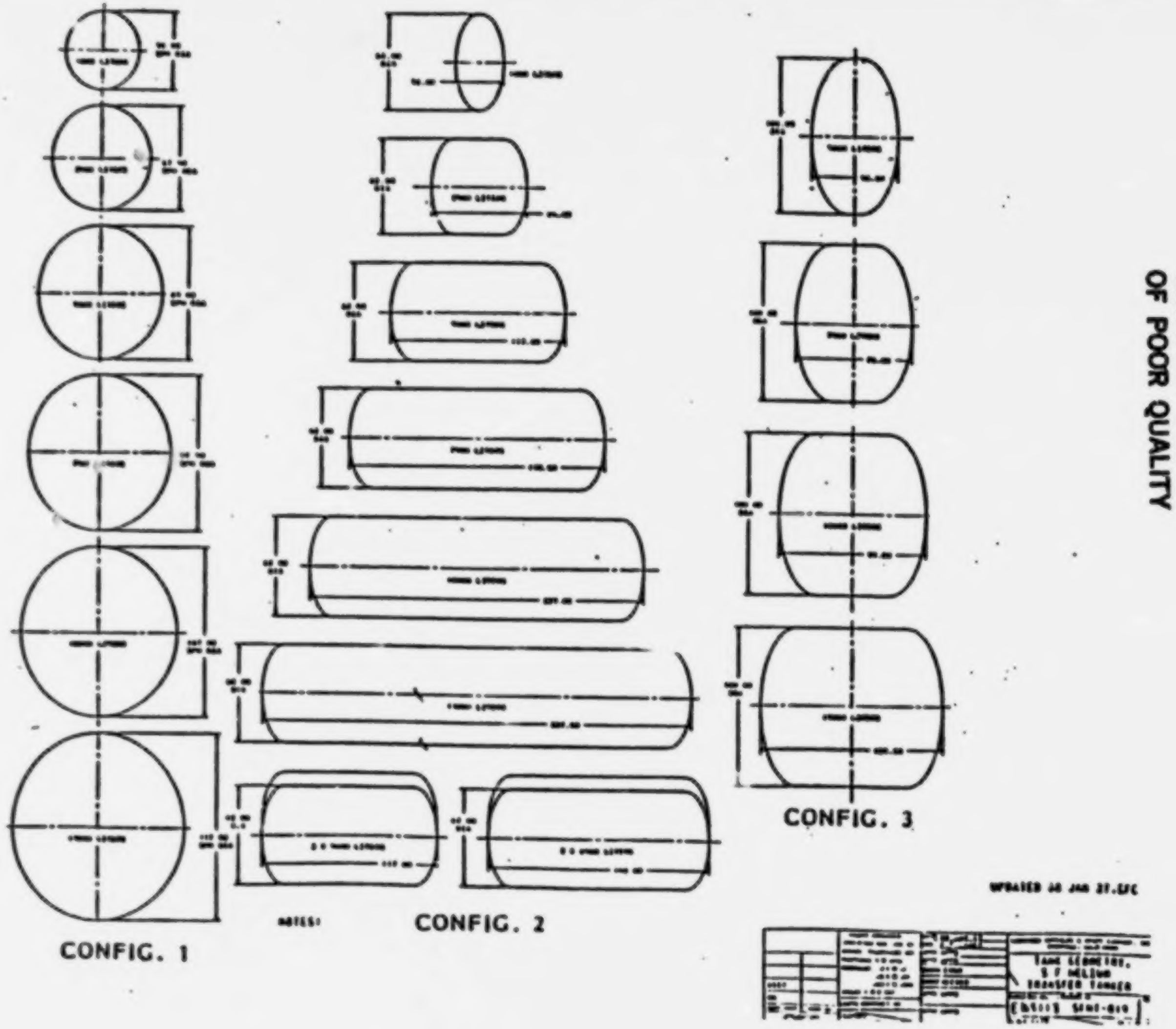

ORIGINAL PAGE IS
OF POOR QUALITY

TRANSPORTATION COST

OUR PREVIOUS SATELLITE SERVICING STUDIES HAVE SHOWN THAT THE DOMINANT COST DRIVES FOR RESUPPLY AND SERVICING IS SHUTTLE TRANSPORTATION COST.

THE FOLLOWING COST COMPUTATION SHEET FROM NASA WAS USED FOR THIS STUDY.

WHILE THE $138M PER DEDICATED LAUNCH WAS DERIVED FROM THE 1987 MOU WITH THE AIR FORCE AND USED FOR THIS STUDY; MANY SOURCES FEEL THAT $150M IS A MORE REALISTIC COST. THE READER IS AT LIBERTY TO SUBSTITUTE THEIR OWN ESTIMATE IN STEP 11, IN PLACE OF $138M, TO SEE HOW IT WOULD AFFECT THE SFHT CONFIGURATION SELECTION.

SFHT

NASA VARIABLE PRICE FOR SHUTTLE TRANSPORTATION

PART II. VARIABLE PRICE FOR SHUTTLE TRANSPORTATION
1987 Dollars, A.F. NEG. $115M x 1.2 For Commercial; 28.5° i

A. Up-Leg Provisions

1. Enter payload length (ft): ______ (A1)

2. Calculate length load factor: $\frac{A1 + 0.5}{60}$ = ______ (A2)

3. Enter payload weight (lbm): ______ (A3)

4. Calculate weight load factor: $\frac{A3 + 1500}{65000}$ 57000 = ______ (A4)

B. Down-Leg Provisions

5. Enter payload length (ft): ______ (B5)

6. Calculate length load factor:

If B5 ≥ 20: $\frac{B5 + 0.5}{60}$ = ______
or
If B5 < 20: $\frac{B5}{60} \cdot \frac{B5}{20}$ = ______

} ______ (B6)

7. Enter payload weight (lbm): ______ (B7)

8. Calculate weight load factor: $\frac{B7 - 20000}{32000} \times 0.75$ = ______ (B8)
If B8 less than 0, Set B8=0

C. Price Computation

9. Enter maximum of A2, A4, B6 or B8 = ______ (C9)

10. Calculate charge factor: C9 ÷ 0.75 = ______ (C10)
If C10 > 1.0, set C10 = 1.0
Enter 1.0 for a dedicated mission.

11. Transportation Charge = C10 · 140M ——→ [ ] (11)

TRADEOFFS

THE TRADEOFFS SHOWN ON THE ACCOMPANYING CHART WERE MADE TO SHOW THE INFLUENCE OF TANKER CONFIGURATION, CAPACITY, AND ORIENTATION TO TRANSPORT COST (TRANS COST) AND TANKER NON-RECURRING AND ONE FLIGHT UNIT COST. THE RECURRING COST HAS ALSO BEEN LISTED. THE TANKER COST HAS BEEN DERIVED USING A COST ESTIMATING RELATIONSHIP BASED SOLELY ON WEIGHT FOR THE STRUCTURE, AVIONICS, AND FLUID SUBSYSTEMS SIMILAR TO THE SFHT. THESE COSTS ARE A ROM AND SHOULD BE USED FOR COMPARISON ONLY, THEY ARE NOT INTENDED AS A FIRM COST ESTIMATE.

THE ASTERISKS INDICATE THE LOWEST TRANSPORTATION COST FOR A CAPACITY CATEGORY.

NOTE THAT FOR 13K LITERS THE LENGTH IS NOT THE DRIVER AS THE WEIGHT FACTOR BECOMES DOMINANT FOR TRANSPORTATION COST. THE SHORTER CONFIGURATION OF THE TWO WOULD NORMALLY BE SELECTED FOR OTHER CONSIDERATIONS.

SFHT

TRADE OFFS (ROM $)
CONFIGURATION

	CAPACITY (KL)	DEWAR X-AXIS LEN (IN)	DEWAR Y-AXIS LEN (IN)	LF (LEN)	LF (WT)	TRANS COST ($M)	TANKER COST ($M)**	RECUR COST ($M)
CONFIG 2	1	32*	62	0.0911	0.0934	16.77	12.16	4.86
	1	62	32	0.1328	0.0394	24.44	12.16	4.86
	2.5	62	64	0.1328	0.0639	24.44	30.4	12.16
	5	62	117	0.1328	0.1047	24.44	60.80	24.32
	6.5	62*	152	0.1328	0.1292	24.44	79.04	31.62
	7.5	170*	62	0.1328	0.1456	26.79	91.20	6.48
	10 (2 x 5)	117	124	0.2092	0.1864	38.49	121.60	48.61
	13 (2 x 6.5)	152	124	0.2578	0.2354	47.44	158.08	63.23
	0.668	35.9*	53.8	0.0965	0.0340	17.76	8.12	3.25
	0.668	53.8	35.86	0.1214	0.0340	22.34	8.12	3.25
	1	53.8	44.78	0.1214	0.0394	22.36	12.16	4.86
	2.5	53.8*	85.04	0.1214	0.0639	22.34	30.40	12.16
	5	53.8*	152.14	0.1214	0.1047	22.34	60.80	24.32
CONFIG 3	5	58	100	0.1273	0.1047	23.41	60.80	24.32
	7.5	78	100	0.1550	0.1456	28.53	91.20	36.48
	10	99*	100	0.1842	0.1864	34.30	121.60	48.61
	13	123	100	0.2175	0.2354	43.31	158.08	63.23
CONFIG 1	1	50	50	0.1161	0.0394	21.37	12.16	4.86
	2.5	67.5	67.5	0.1404	0.0639	25.84	30.40	12.16
	5	85	85	0.1648	0.1047	30.31	60.80	24.32
	7.5	97.5	97.5	0.1821	0.1456	33.51	91.20	36.48
	10	107	107	0.1953	0.1864	35.94	121.60	48.64
	13	117*	117	0.2092	0.2354	43.31	158.08	63.23

*LOWEST TRANSPORT COST PER CAPACITY
**NR + 1 FLT UNIT
CRYOSTAT MASS RATIO 3:1
EXTERNAL DIMENSION = DEWAR + 27.61 (IN.)

SFHT

OPTIMIZED TANKER COST SAVINGS

CONFIGURATION	TRANS COST ($M)	TANKER COST ($M)
1-K 32 IN.	16.8	12.2
1-K 62 IN.	24.4	12.2
DELTA COST	7.6	

DELTA TRANS COST (50 FLIGHTS)	380.0 $M
NEW STRUCTURE	12.2
DELTA CRYOSTAT COST	0.0
COST SAVINGS	367.8 $M

AS AN ILLUSTRATION OF THE RELATIVE COST OF A NEW TANKER VS THE DIFFERENTIAL TRANSPORT COST OF A NON-OPTIMIZED TANKER, SHOWN HERE, WE SELECTED THE 1K TANKERS OF CONFIGURATION 2. BY ROTATING THE TANK 90° TO TAKE ADVANTAGE OF ITS SMALLER DIMENSION, WHICH WOULD REQUIRE A DIFFERENT TANKER STRUCTURE THAN THE 5K TANK, THE OVERALL SAVINGS COULD BE AS MUCH AS $367.8M IN FIFTY FLIGHTS.

UP-FRONT COST

IF WE DESIRED TO SERVICE ALL THE USERS UP TO 7.5K LITERS WE COULD BUILD ONE TANKER OF 7.5K AND ONE AT 5K. HOWEVER, THE REQUIREMENT FOR 7.5K CAPACITY OCCURS ONLY ONCE IN 44 EVENTS. BY BUILDING TWO 5K TANKERS WE COULD ALSO:

- SERVICE 7.5K USERS
- A WARM SIRTF
- HAVE A SPARE 5K TANKER AVAILABLE MOST OF THE TIME
- BUILD THE SECOND TANKER AT A LATER DATE TO KEEP THE ANNUAL FUNDING REQUIREMENT LOWER

2 TO 5K TANKERS	85.12 $M
1-5K AND 1-7.5 TANKER	152.00 $M

SAVINGS 66.88 $M

2 TO 5K TANKERS PROVIDE A SPARE AND USE THE SAME STRUCTURE

2 TO 5K TANKERS WILL RESUPPLY A WARM SIRTF

FLUID SUBSYSTEM - OVERVIEW

- THE LIQUID MANAGEMENT SYSTEM SUPPLIES LIQUID TO THE PUMP UNDER VARIOUS ACCELERATION LEVELS AND DIRECTIONS
- ITS DESIGN IS BASED ON EXTENSIVE EXPERIENCE WITH GALLERY ARM SYSTEMS UTILIZED FOR STORABLE PROPELLANT SYSTEMS AT LOCKHEED, COMBINED WITH THE ANALYSIS OF HE-II PERFORMANCE OR THE GALLERY ARM SYSTEMS.
- STUDIES CONDUCTED UNDER CONTRACT NAS2-12051 NASA/AMES ARE USED AS THE BASIS FOR THE SFHT LMD.
- SIX GALLERY ARMS WERE SELECTED BASED ON A COMBINATION OF RESIDUAL LIQUID QUANTITIES AND INTERNAL HARDWARE PACKAGING.

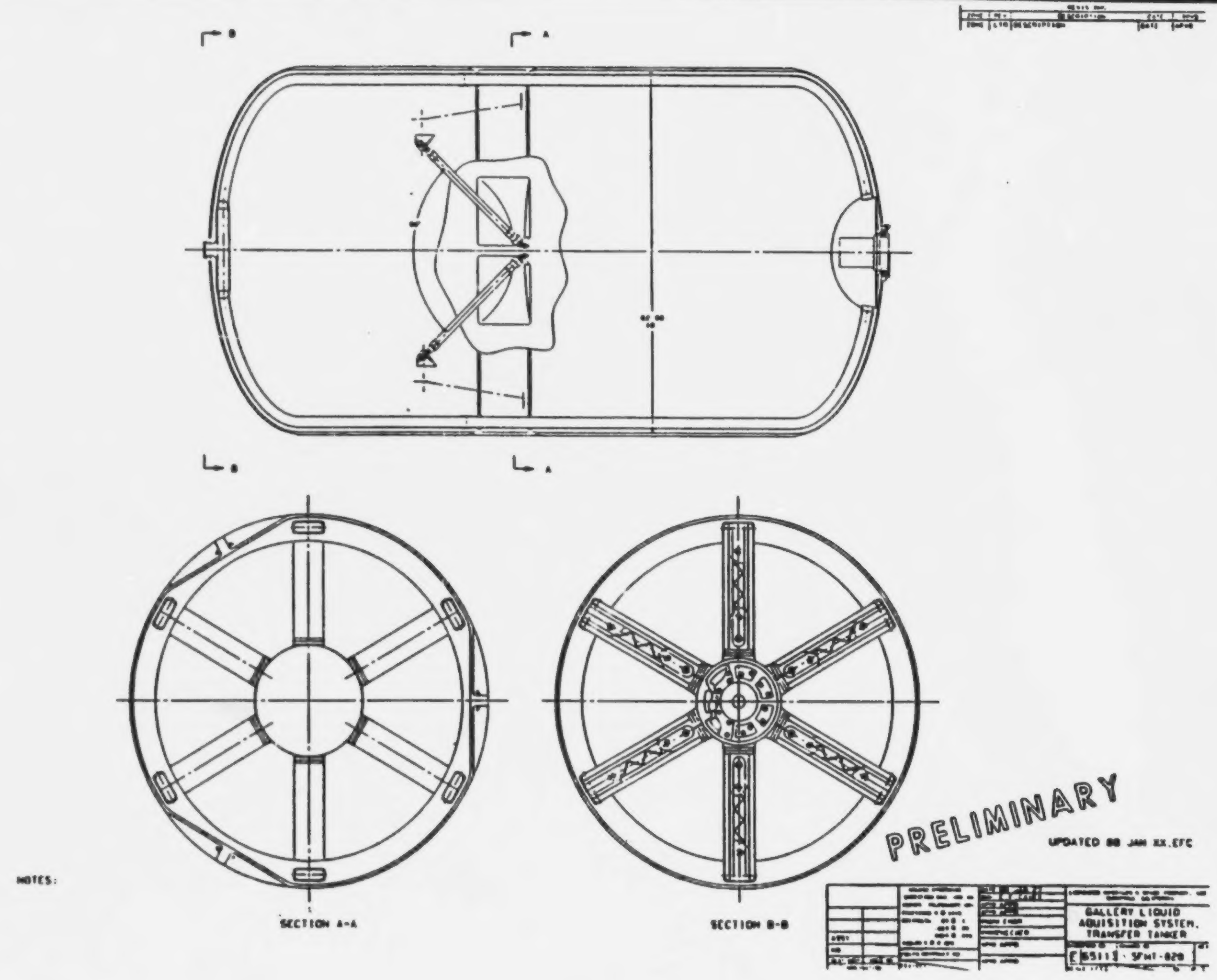

ORIGINAL PAGE IS
OF POOR QUALITY

- THIS PRELIMINARY SCHEMATIC SHOWS 2 TANK SYSTEMS (GUARD TANK) FOR BOTH THE SFHT AND THE RECEIVER SYSTEM.
- THE ARRANGEMENT OF COMPONENTS IS PRIMARILY BASED ON THE REQUIREMENT FOR 2 FAULT SAFETY TOLERANCE AND 1 FAULT MISSION SUCCESS.
- THE VALVES LOCATED INSIDE THE TANK MAY BE RELOCATED PENDING FURTHER STUDIES OF "CASTLES CATASTROPHY" AND THE USE OF A BARO-SWITCH.
- THE COLD PRESSURE RELIEF VALVES MAY HAVE TO BE REPLACED BY COLD BURST DISKS AND ARE INDICATED AS AN OPTION.
- THE FOUNTAIN EFFECT PUMP (FEP) IS SHOWN AS THE BASELINE.

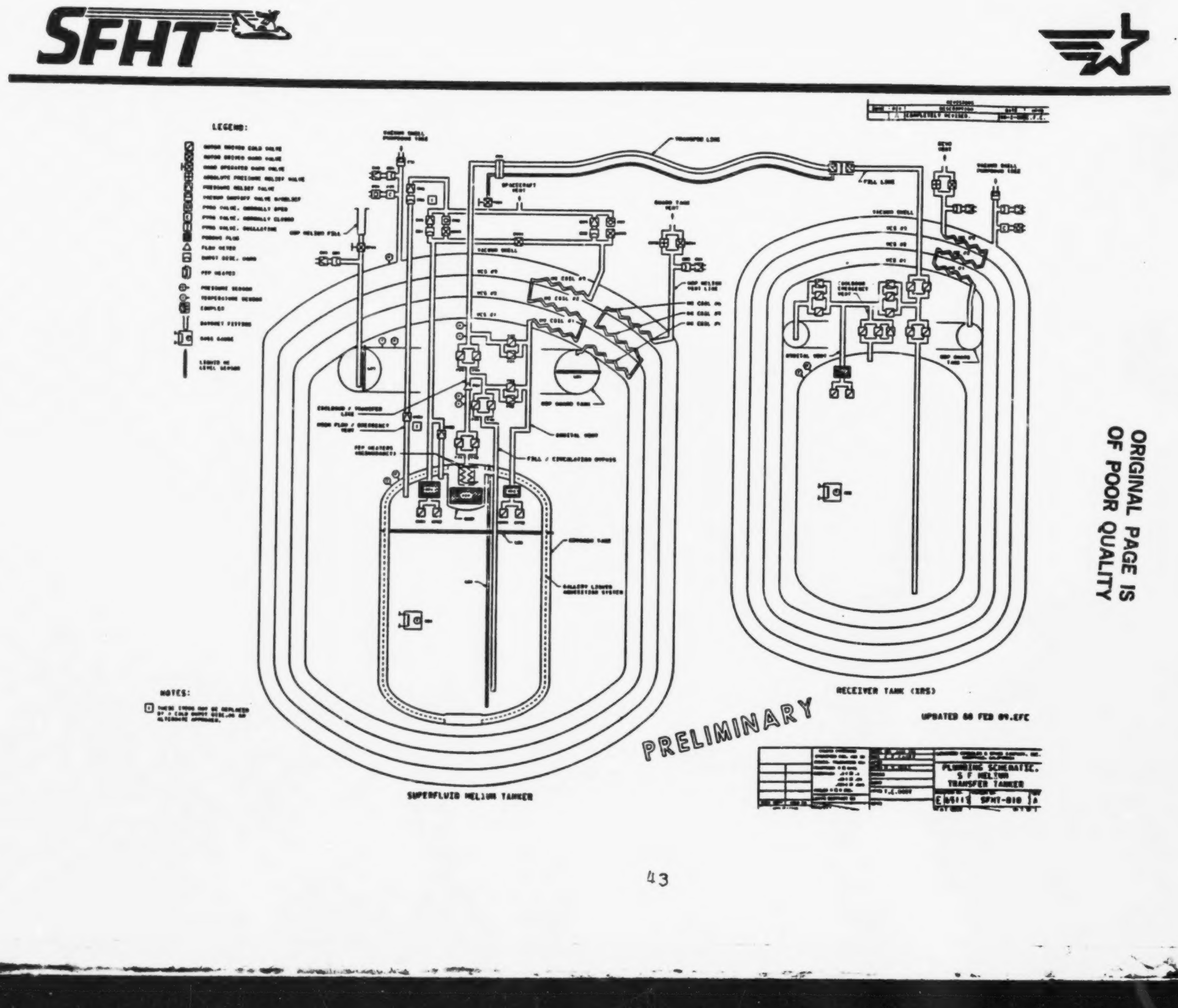

ORIGINAL PAGE IS
OF POOR QUALITY

DEWAR CONCEPTS

- THE GEOMETRY CONCEPTS SHOWN WERE COMPARED BASED ON THE FOLLOWING CONSIDERATIONS.
  - TANK WEIGHT
  - MANUFACTURING COSTS
  - PACKAGING WITH EMPHASIS ON UTILIZATION OF MINIMUM SHUTTLE BAY LENGTH
- THE SPHERE HAD A SMALL ADVANTAGE IN TERMS OF SURFACE AREA TO VOLUME RATIO BUT RATED POOR IN OTHER CRITERIA AND WAS ELIMINATED EARLY IN THE STUDY.
- THE REMAINING CYLINDER/DOME COMBINATIONS WERE STUDIED FOR RELATIVE CAPABILITY.
- THE DOMES ARE 2:1 ELLIPSES.

- O THIS FIGURE SHOWS THE CANDIDATE SYSTEMS PACKAGED IN THE SHUTTLE BAY ON THEIR CRADLES.
- O ONE OF THE PRINCIPLE CRITERIA WAS THE TRANSPORTATION COSTS WHICH, AS WILL BE SHOWN, ARE DRIVEN BY OCCUPIED SHUTTLE BAY LENGTH.

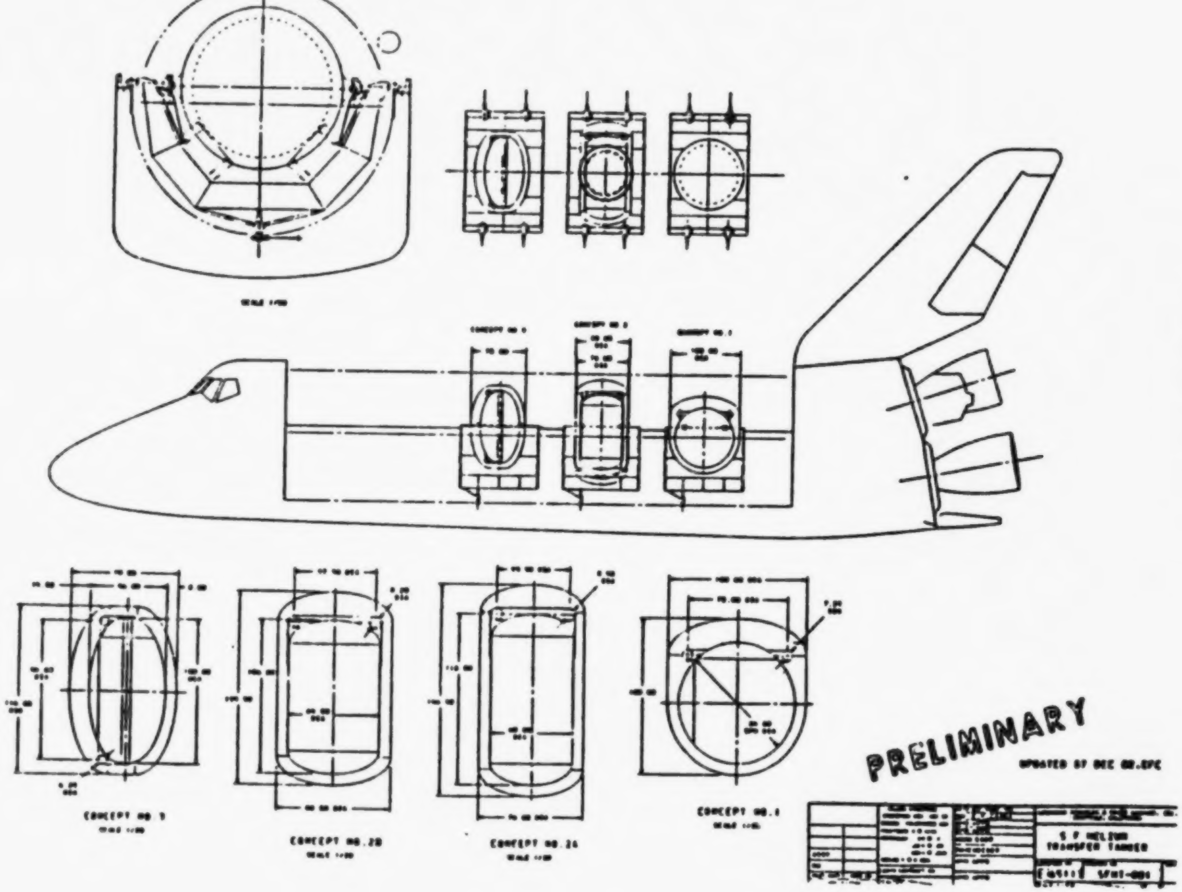

ORIGINAL PAGE IS
OF POOR QUALITY

- THE WEIGHT SUMMARY IS SHOWN HERE FOR A TANK WHICH CONTAINS 5000 L OF HE-II.
- A CRITERIA FUR COMPARISON WITH OTHER HELIUM SYSTEMS IS THE TOTAL LOADED SYSTEM WEIGHT DIVIDED BY THE WEIGHT OF HELIUM, WHICH IS 2.5 FOR THIS DESIGN.
- THE GEOMETRY FOR THESE WEIGHTS IS THE CYLINDRICAL GEOMETRY.

SFHT

5000 LITER TANKER

SINGLE TANKER VERSIONS

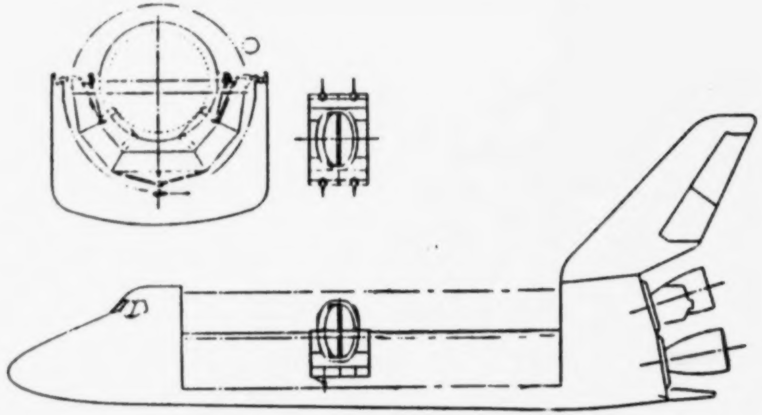

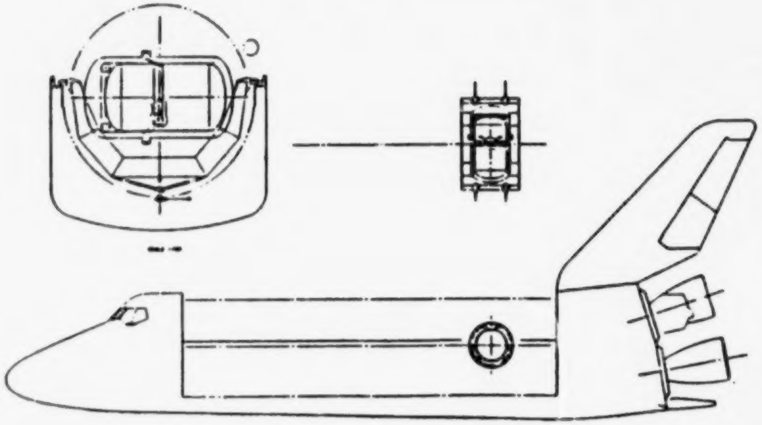

SFHT DEWAR WEIGHT SUMMARY (5000 LITER SYSTEM)

		LBS
He-II	CRYOGEN TANK (V = 5250 L, 5% ULLAGE)	814
NBP	CRYOGEN TANK (V = 158 L, 5% ULLAGE)	43
	SUPPORTS (12 PODS)	40
	LIQUID MANAGEMENT DEVICE	20
	VAPOR COOLED SHIELDS (3 SHIELDS)	192
	VACUUM CONTAINER	620
	MULTILAYER INSULATION (6 IN.)	219
	PLUMBING AND ASSOCIATED COMPONENTS	100
	LOAD RINGS	200
	MISCELLANEOUS	50
	DEWAR CONTINGENCY (5%)	114
	TOTAL DRY WEIGHT (He-II TANK)	2412
	(NBP TANK)	
	LOADED HELIUM (95% LIQUID @ 1.8 K)	1600
	(95% LIQUID @ 4.2 K)	39
	TOTAL WET WEIGHT	4051 LBS
	TOTAL WET WEIGHT/HELIUM WT. =	2.5

- THE SAME COMPARISON IS SHOWN FOR 10000 L SYSTEMS WHICH INCLUDES A DUAL 5000 L APPROACH.
- THE LOWEST TRANSPORTATION COST IS FOR THE SINGLE "PILL" TANK DESIGN.

SFHT

10,000 LITER TANKER

SINGLE TANKER VERSION

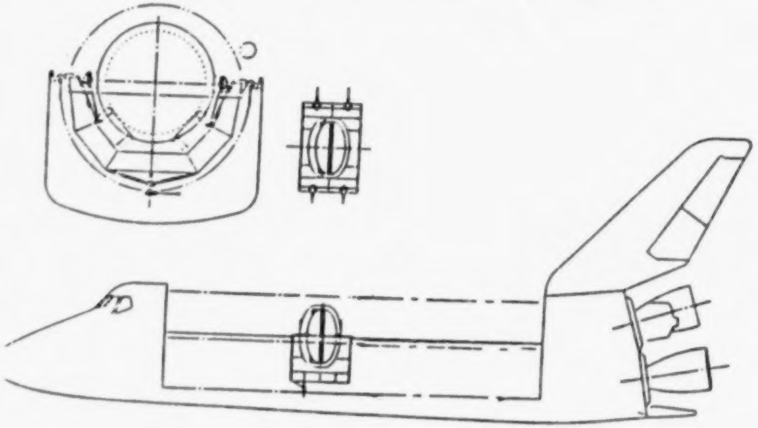

DUAL TANKER VERSIONS

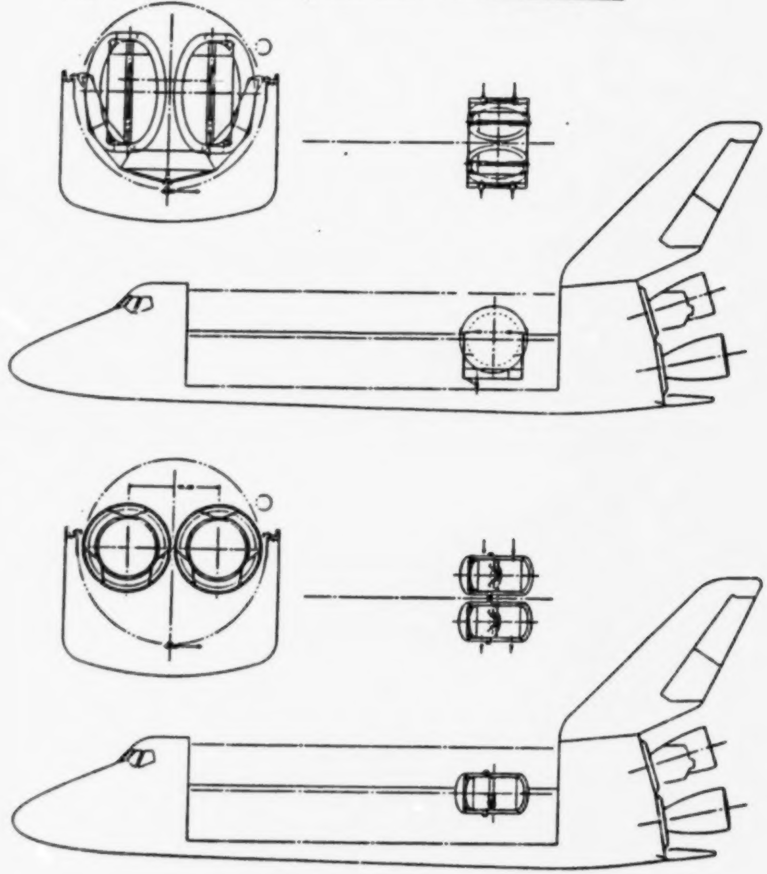

SFHT

TANK GEOMETRY CONCLUSIONS

-- THE SPACE TRANSPORTATION COSTS FAR OUTWEIGH THE TANKER COSTS

-- FOR MOST SYSTEMS STUDIED THE COST ASSOCIATED WITH SHUTTLE BAY LENGTH EXCEEDS THE COST ASSOCIATED WITH TANKER WEIGHT (LENGTH DOMINATES THE COST)

-- THE SELECTION OF TANKER FLUID CAPACITY IS SOMEWHAT ARBITRARY. THE STRONGEST CURRENT GUIDE-LINE FOR TANK SIZE IS SIRTF (4000 L FOR TOP-OFF OF COLD TANK, ~10,000 L FOR COOL-DOWN AND REFILL)

-- WE PROPOSE SELECTION OF A 5000 L CYLINDRICAL TANKER FOR SHUTTLE USE.

-- FOR SPACE STATION APPLICATION A SINGLE 10,000-13,000 L TANKER IS MORE APPROPRIATE.

-- A FINAL DEFENSIBLE SELECTION OF TANKER SIZE AND SHAPE REQUIRES FIRM MISSIONS WITH AN EXTENSIVE "TRAFFIC STUDY"

HELIUM II TRANSFER MODEL

- THE DIAGRAM SHOWS THE VARIOUS PARAMETERS WITHIN THIS COMPUTER MODEL.
- THIS MODEL CAN BE USED TO STUDY THE INFLUENCE OF RESIDUAL HEAT LOADS, BATH TEMPERATURE AND LIQUID VOLUME ON HE-II TRANSFER.
- PHASE SEPARATOR(S) CAN BE ASSIGNED TO THE SUPPLY TANK AND/OR RECEIVER TANK TO REJECT HEAT ENERGY.
- VARIOUS POROUS MATERIALS CAN BE SELECTED FOR THE FEP OR PHASE SEPARATOR.
- DIMENSIONS OF THE TRANSFER LINE CAN BE VARIED TO STUDY THEIR EFFECT.
- HEAT LOAD ON THE TRANSFER LINE IS BASED ON THE ASSUMPTION OF 1 W PER METER OF LENGTH.
- THE MATERIAL USED FOR THE FEP IS A 1 μM FERRO CERAMIC PLUG.
- BATH TEMPERATURE STUDIED RANGES FROM 1.6-1.8K.

SFHT

SCHEMATIC DIAGRAM OF THE TRANSFER SYSTEM

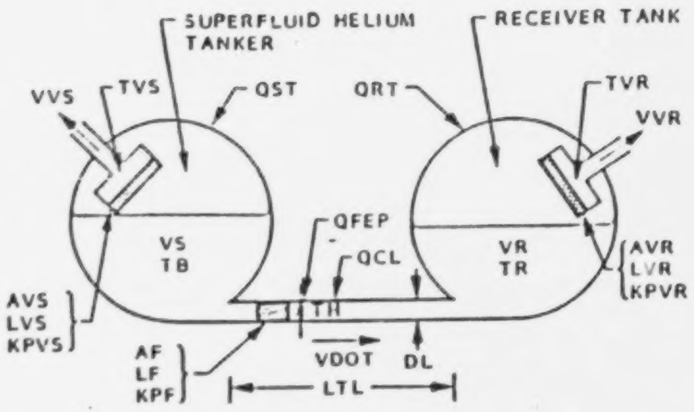

QCL	= HEAT INPUT TO THE COUPLING AND TRANSFER LINE (W)
QST	= HEAT INPUT TO SUPPLY TANK (TANKER) (W)
QRT	= HEAT INPUT TO RECEIVER TANK, (W)
VS	= LIQUID VOLUME IN SUPPLY TANK (L)
VR	= LIQUID VOLUME IN RECEIVING TANK (L)
TB	= BATH (SUPPLY TANK) TEMPERATURE (K)
TR	= RECEIVER TEMPERATURE (K)
TH	= TEMPERATURE AT THE DOWNSTREAM OF THE PUMP (K)
QFEP	= HEAT INPUT TO THE FOUNTAIN EFFECT PUMP (W)
VDOT	= VOLUMETRIC FLOWRATE THROUGH THE TRANSFER LINE (L/HR)
TVR, TVS	= TEMPERATURE AT THE DOWNSTREAM OF THE PHASE SEPARATOR OF THE RECEIVING TANK AND SUPPLY TANK (K)
VVR, VVS	= RATE OF LIQUID LOSS THROUGH THE PHASE SEPARATOR OF THE RECEIVING TANK AND THE SUPPLY TANK (L/HR)
AVR, AVS	= SURFACE AREA OF THE PHASE SEPARATORS (cm^2)
LVR, LVS	= THICKNESS OF THE PHASE SEPARATORS (cm)
KPVR, KPVS	= PERMEABILITY OF THE PHASE SEPARATORS (cm^2)
AF	= SURFACE AREA OF THE FEP (cm^2)
LF	= THICKNESS OF THE FEP (cm)
KPF	= PERMEABILITY OF THE FEP (cm^2)
DL	= DIAMETER OF THE TRANSFER LINE (cm)
LTL	= LENGTH OF THE TRANSFER LINE (cm)

- THIS PROGRAM CONTAINS FIVE MAIN SUBROUTINES.
- AT EACH TIME STEP, THE BATH TEMPERATURE OF THE SUPPLY TANK IS CALCULATED BY ENERGY BALANCE.
- THE FLOW RATE (VDOT) AND THE DOWNSTREAM TEMPERATURE OF THE FEP (T_H) ARE COMPUTED BY THE FEP SUBROUTINE TOGETHER WITH THE PRESSURE DROP SUBROUTINE.
- THE THERMODYNAMICS OF THE RECEIVER TANK IS THEN OBTAINED BY ENERGY BALANCE AGAIN.
- IF PHASE SEPARATORS ARE PRESENT, LIQUID LOSS RATES ARE CALCULATED BY THE VLPS SUBROUTINE.

SFHT

THERMAL TRANSFER MODEL
FLOW CHART

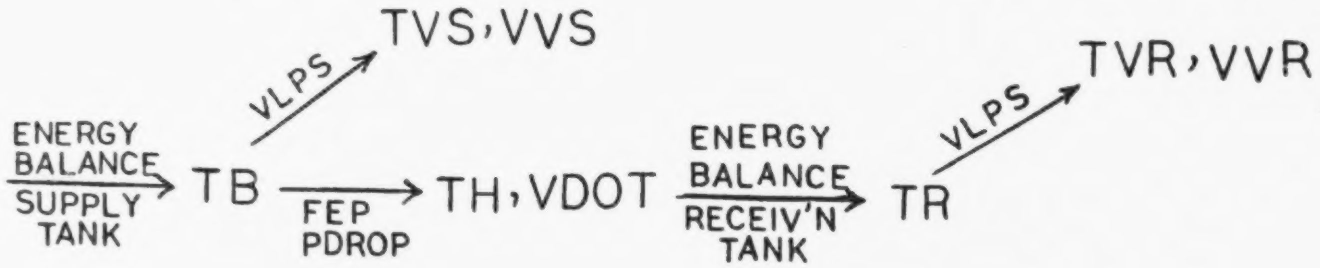

SUBROUTINES

1. PDROP
2. PROP
3. MPUMP
4. FEP
5. VLPS

SFHT

HELIUM II TRANSFER MODEL

ASSUMPTIONS

- FEP BEHAVES IDEALLY AS PURE SUPERLEAK.
- TEMPERATURE OF TRANSFER LINE AND RECEIVER TANK BELOW T_{λ}.
- ALL THE HEAT LOADS ON THE COUPLING AND TRANSFER LINE, EVENTUALLY END UP IN THE RECEIVER TANK.
- NO PRESSURE IN VENT LINE DOWN STREAM OF THE PHASE SEPARATORS.

SFHT

THERMAL TRANSFER MODEL

SAMPLE OF INPUT DATA

5000 L TANKER

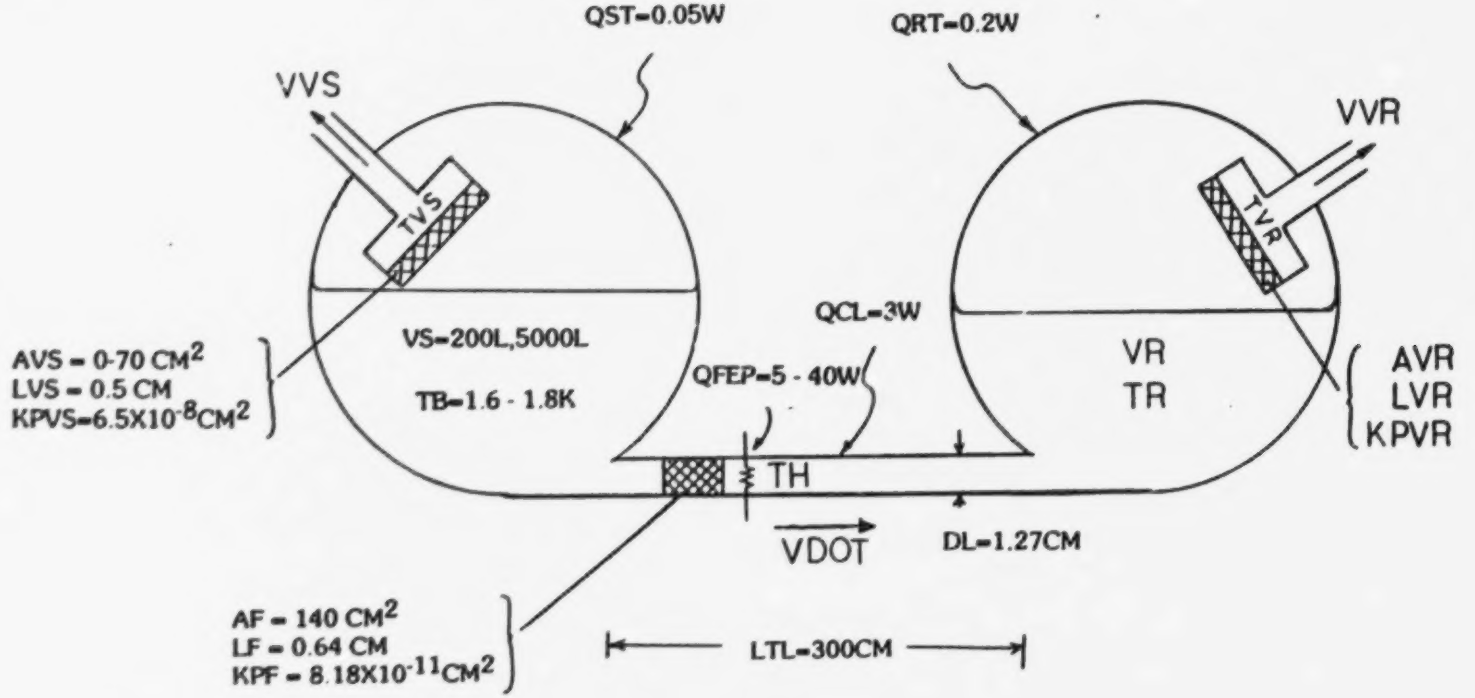

- SCENARIOS 2 AND 4 SIMULATE COMPLETE TRANSFER OF 5000 L AND 200 L OF HE-II FROM A 5000 L TANKER WITH THE AID OF PHASE SEPARATOR.
- SCENARIOS 1 AND 3 SIMULATE THE NO-VENT TRANSFER OF UP TO HALF THE SUPPLY TANK QUANTITY.

SFHT

SUMMARY OF TRANSFER SCENARIOS (5000L TANKER)

SCENARIO NO.	INITIAL TANKER QUANTITY (L)	AMOUNT TRANSFERRED (L)	TANKER VENTING*
1)	5000 L	UP TO 2500 L	NO
2)	5000 L	~ 5000 L	YES
3)	200 L	UP TO 100 L	NO
4)	200 L	~ 200 L	YES

* ALL CASES ASSUME NO RECEIVER TANK VENTING.

- DOWNSTREAM FEP TEMPERATURE (T_H) IS USUALLY THE HOTTEST SECTION OF THE ENTIRE TRANSFER SYSTEM.
- FOR NO-VENT FILL, THE T_H TENDS TO EXCEED THE LAMBDA TEMPERATURE AS THE BATH TEMPERATURE INCREASES DUE TO THE ACCUMULATION OF NORMAL FLUIDS.
- THE RISE OF TEMPERATURE IS THE STEEPEST FOR LARGE FEP HEATER POWER (QFEP).

SFHT

SCENARIO 1 EFFECT OF FEP HEATER POWER ON TRANSFER (TH VS TIME)

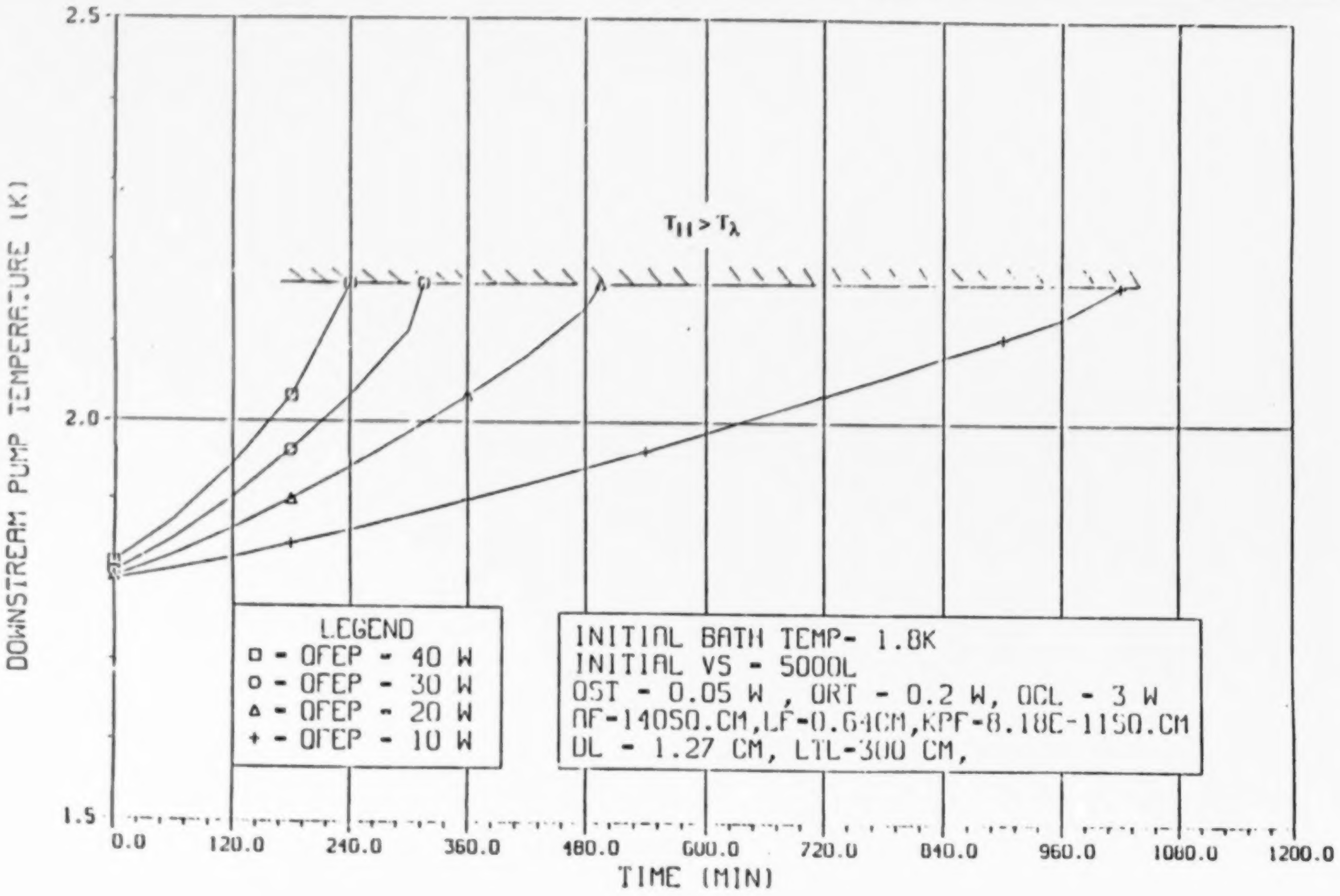

- A WIDE RANGE OF TRANSFER RATE ARE DEMONSTRATED BY APPLYING DIFFERENT HEATER POWER.

- FOR HIGH FLOW RATES, THE RATE OF BUILDUP OF NORMAL FLUID IS HIGH. THIS RESULTS IN SHARP RISE OF THE BATH TEMPERATURE WHICH IN TURN DECREASES THE FLOW RATE. (FEPs ARE MORE EFFICIENT AT LOW TEMPERATURES.)

SFHT

SCENARIO 1 INFLUENCE OF BATH TEMP ON TRANSFER (V VS TIME)

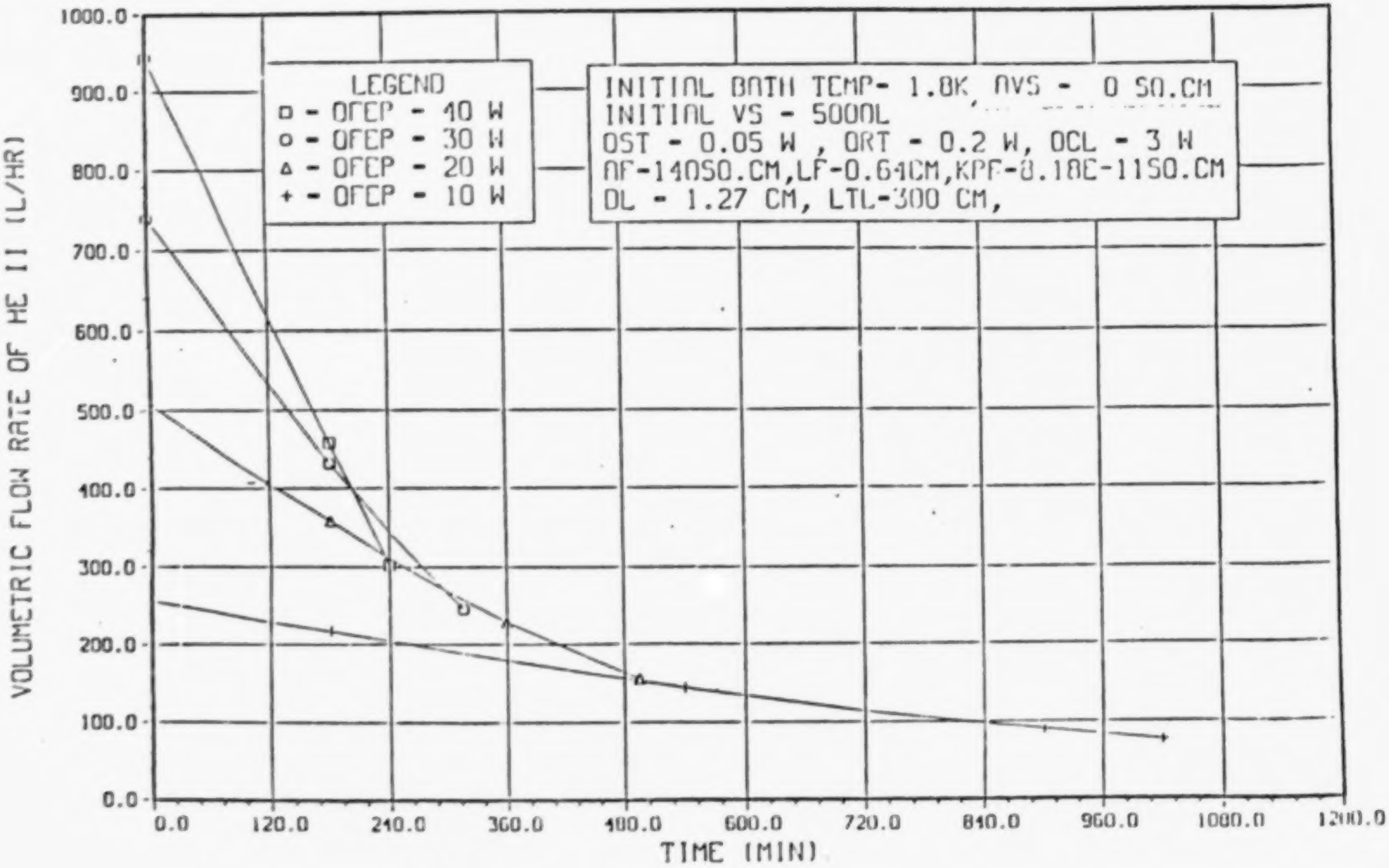

- FOR NO-VENT FILL, APPROXIMATELY HALF OF THE SUPPLY TANK QUANTITY CAN BE TRANSFERED BEFORE T_H EXCEEDS T_λ.

- FOR THE SAME AMOUNT OF FLUID PUMPED, THE TRANSFER TIME IS THE SHORTEST FOR LARGE QFEP.

SFHT

SCENARIO 1 EFFECT OF FEP HEATER POWER ON TRANSFER (VS VS TIME)

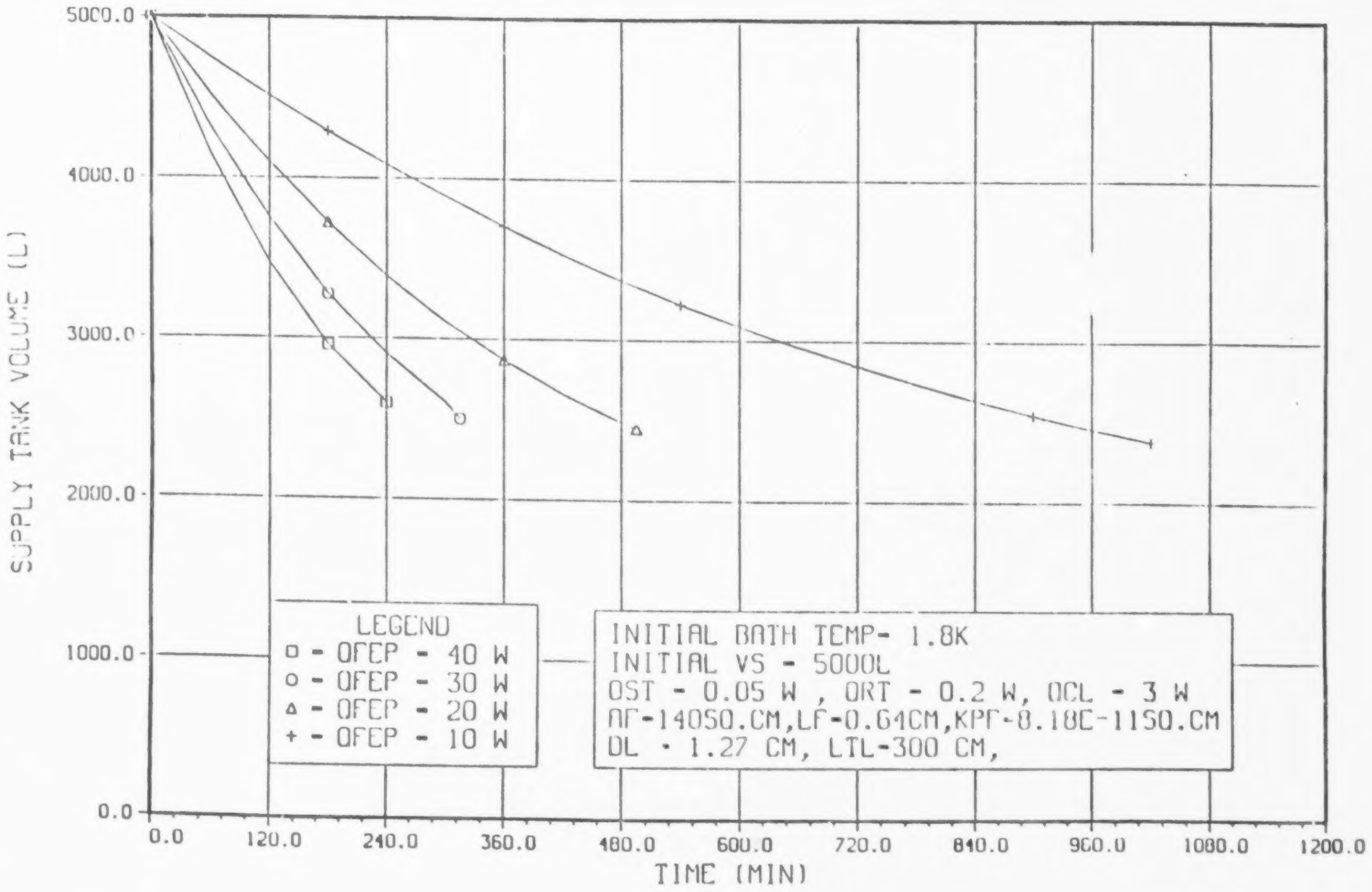

- NO-VENT FILL CANNOT BE COMPLETED BY LOWERING THE BATH TEMPERATURE FROM 1.8-1.6K.

- THE DOWNSTREAM TEMPERATURE (T_H) STILL TENDS TO EXCEED T_λ BEFORE THE TRANSFER IS COMPLETED.

SFHT

SCENARIO 1 INFLUENCE OF BATH TEMP ON TRANSFER (TH VS TIME)

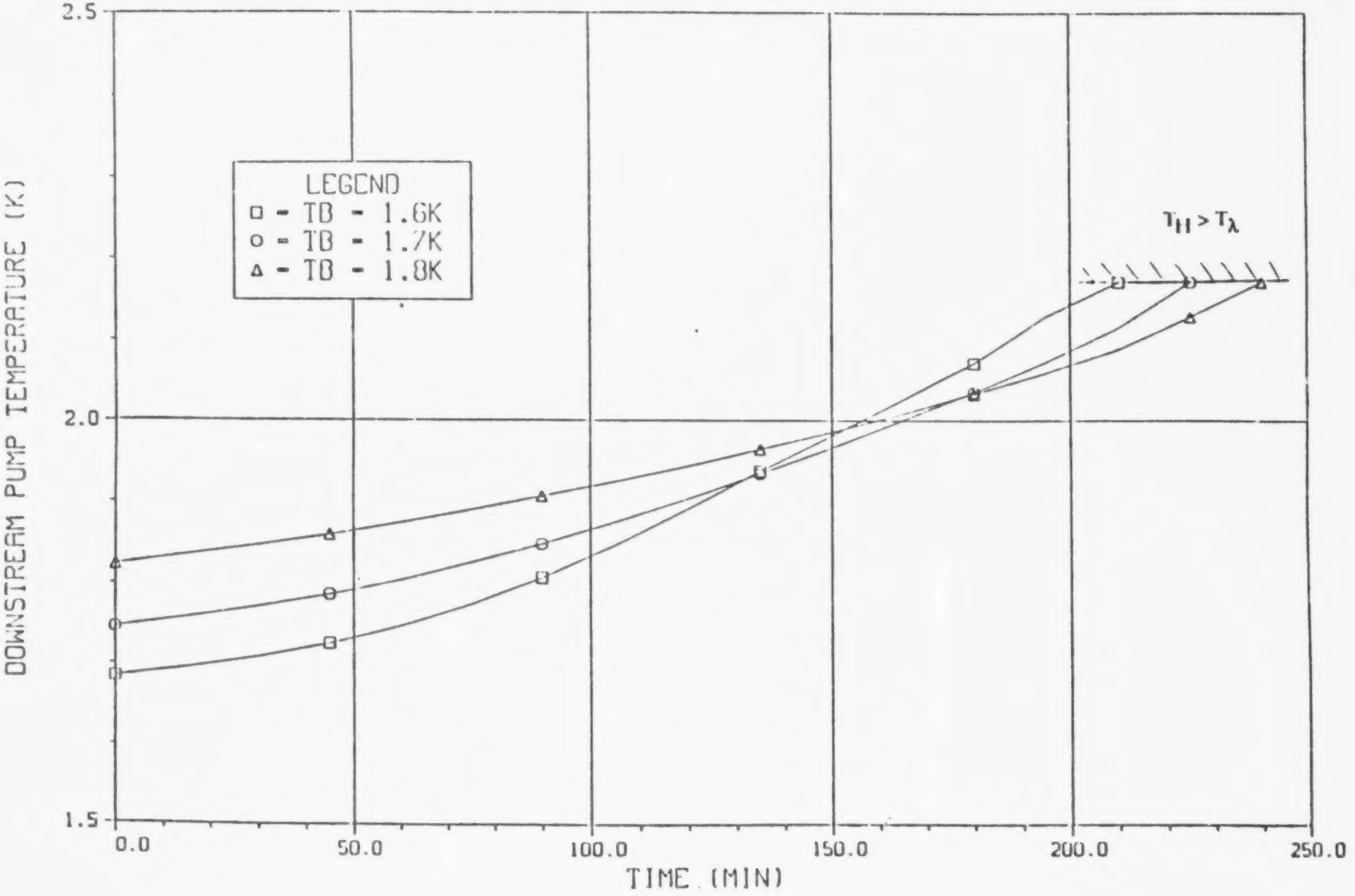

- FEP FLOW RATE IS HIGH AT LOW BATH TEMPERATURE AS EXPECTED.
- FAST CUMULATION OF NORMAL FLUID RESULTS IN STEEP DROP OF FLOW RATE DUE TO RISE IN BATH TEMPERATURE.

SFHT

SCENARIO 1 INFLUENCE OF BATH TEMP ON TRANSFER (V VS TIME)

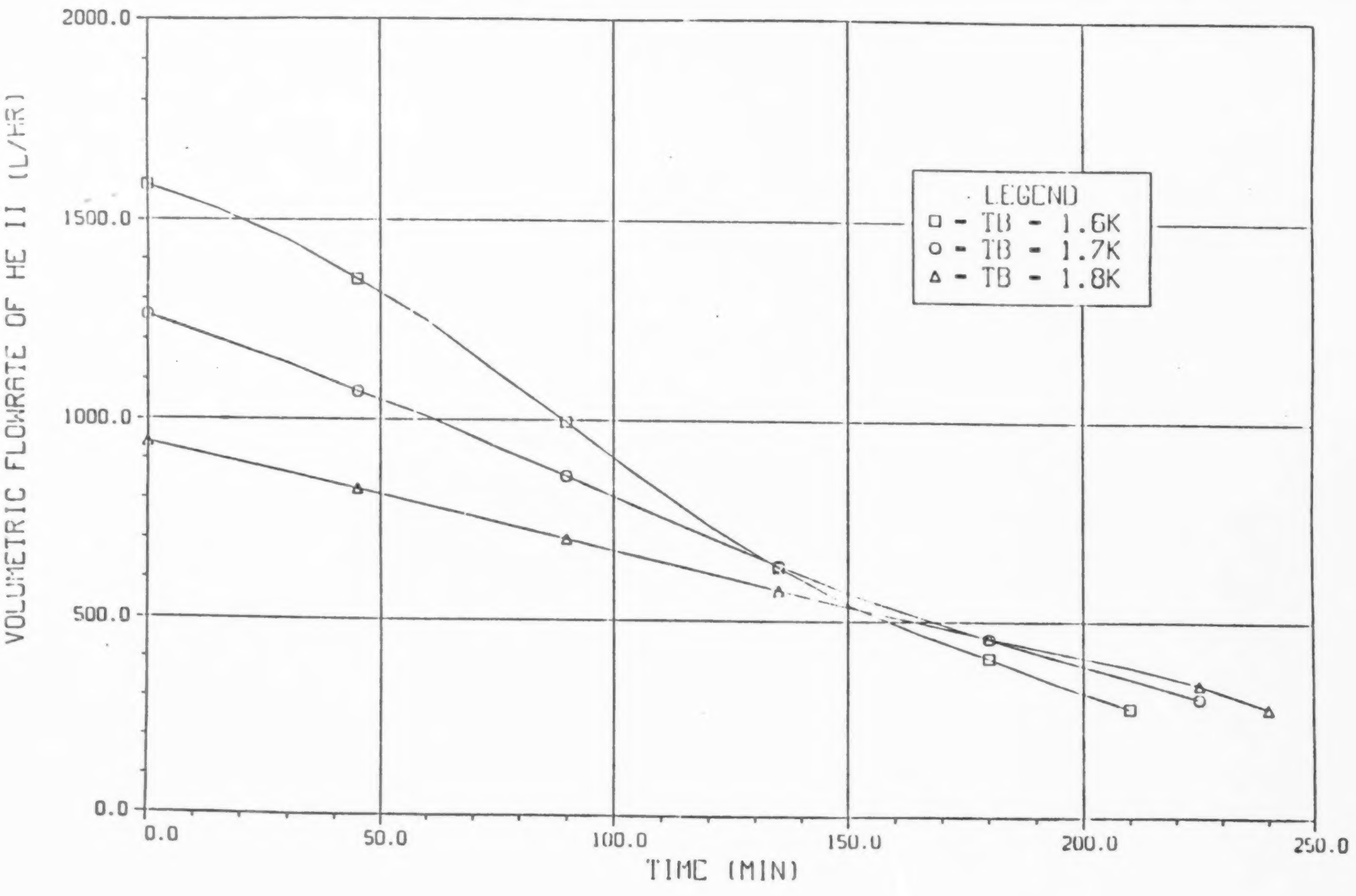

- BY DECREASING THE BATH TEMPERATURE FROM 1.8 TO 1.6, ONE CAN TRANSFER ~20% MORE FLUID BEFORE $T_H > T_\lambda$.

SFHT

SCENARIO 1 INFLUENCE OF BATH TEMP ON TRANSFER (VS VS TIME)

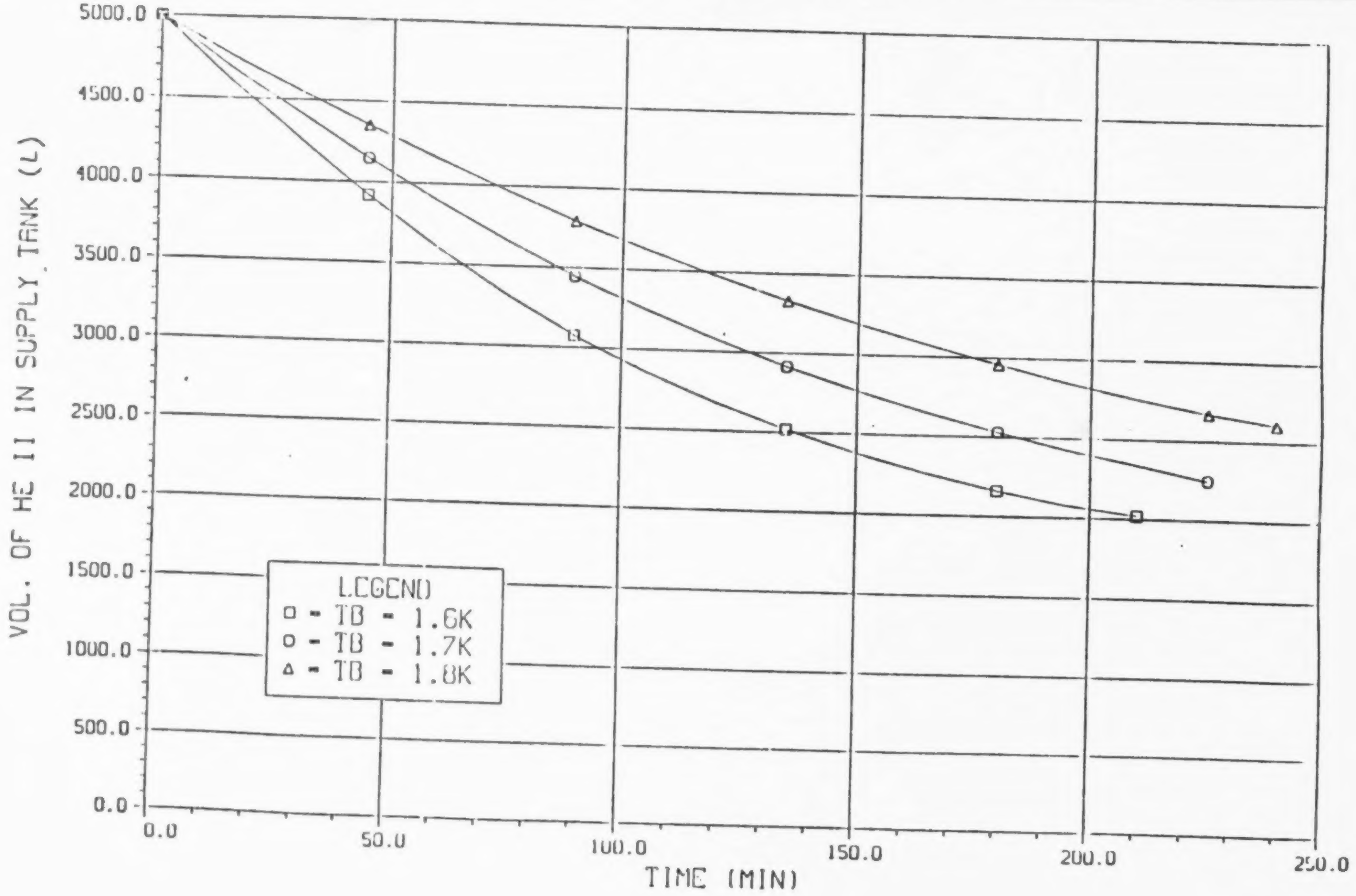

- TRANSFER AT VARIOUS RATES IS STUDIED BY VARYING THE PHASE SEPARATOR AREA.
- IF VENT RATE IS LOWER THAN REQUIRED (AVS = 50 CM^2), T_H WILL EXCEED T_λ AS THE PREVIOUS SCENARIO.
- IF VENT RATE IS JUST RIGHT (AVS = 70 CM^2), T_H CAN BE MAINTAINED CONSTANT.
- FOR AVS = 60 CM^2, T_H RISES INITIALLY BECAUSE THE ACCUMULATION OF NORMAL FLUIDS IS LARGER THAN THE HEAT REJECTION FROM THE PHASE SEPARATOR. THIS RESULTS IN THE DROP OF FLOW RATE UNTIL THE HEAT REJECTION RATE MATCHES THE BUILDUP OF THE ENTROPY, RESULTING IN A CONSTANT T_H.

SFHT

SCENARIO 2
DOWNSTREAM FEP TEMPERATURE VS TIME

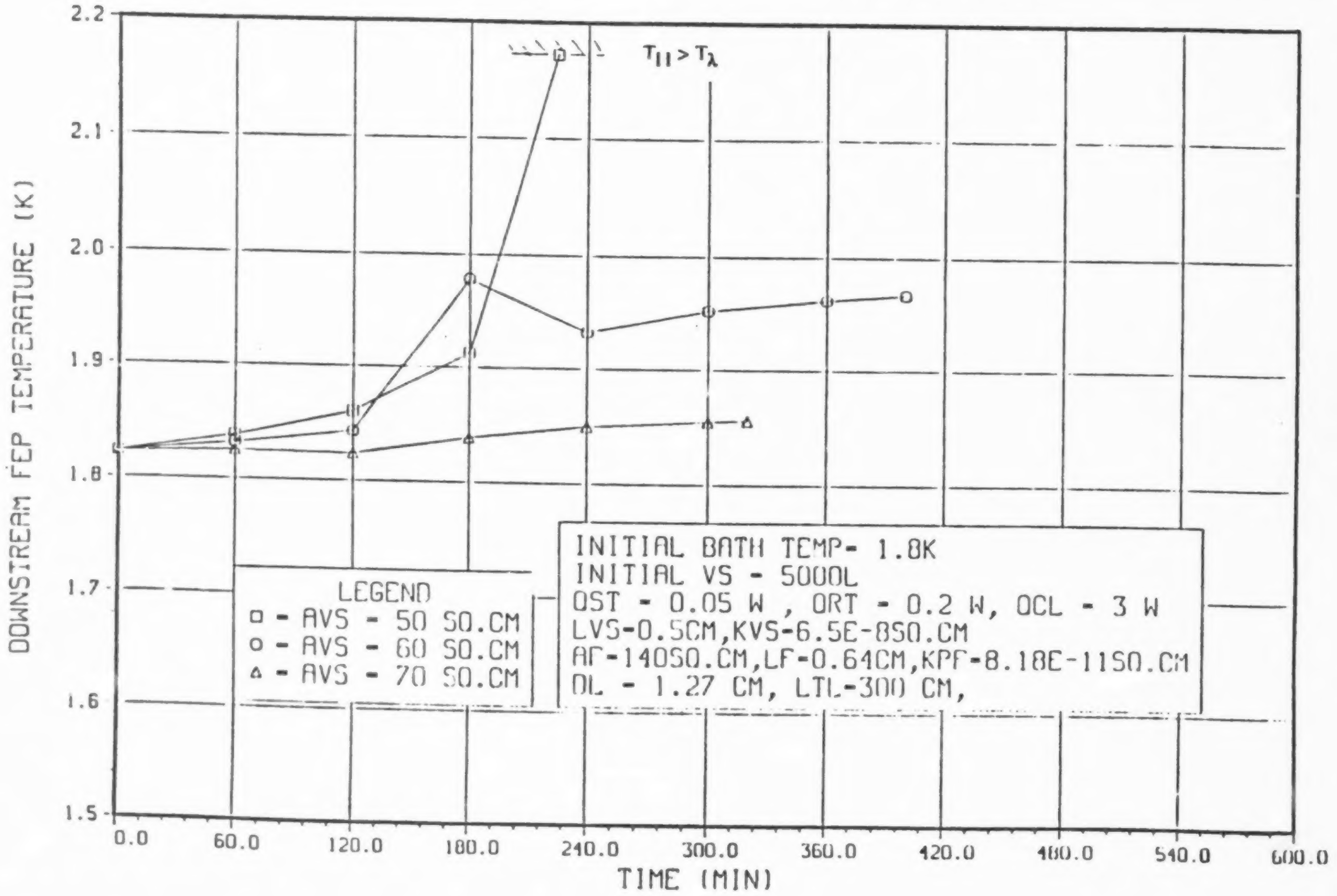

FLOW RATE CAN BE MAINTAINED CONSTANT BY USING THE CORRECT VENT RATE, IF NOT, THE FLOW RATE WILL DROP.

SFHT

SCENARIO 2
VOLUMETRIC FLOWRATE OF He II VS TIME

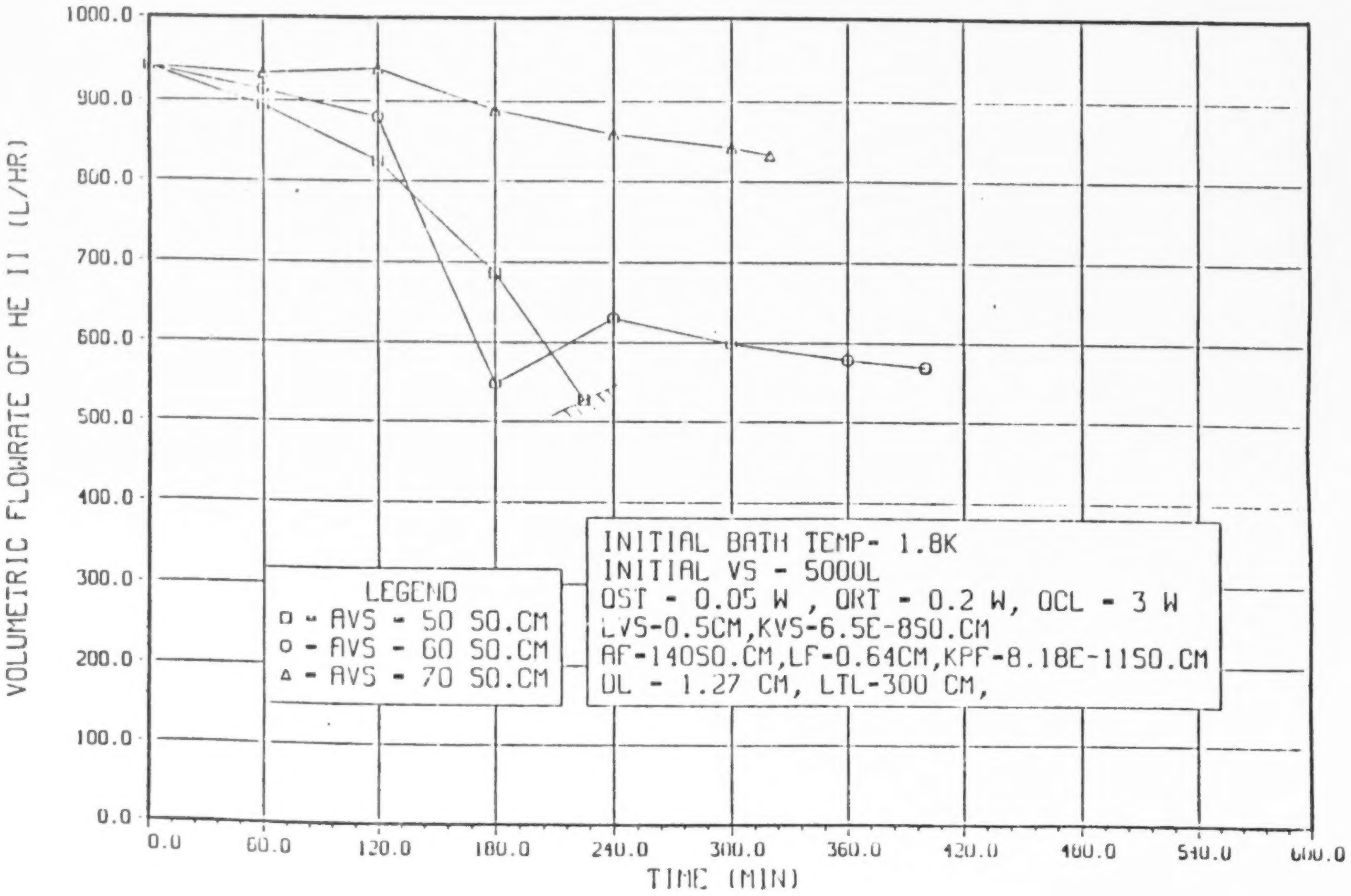

- FOR THE SAME FEP HEATER APPLIED, THE VENT RATE TEND TO INCREASE WITH THE INCREASE OF BATH TEMPERATURE.
- THE MAXIMUM VENT RATE FOR THIS SCENARIO IS ~42 L/HR OR 1.67 G/S.

SFHT

SCENARIO 2
SUPPLY TANK VENT RATE VS TIME

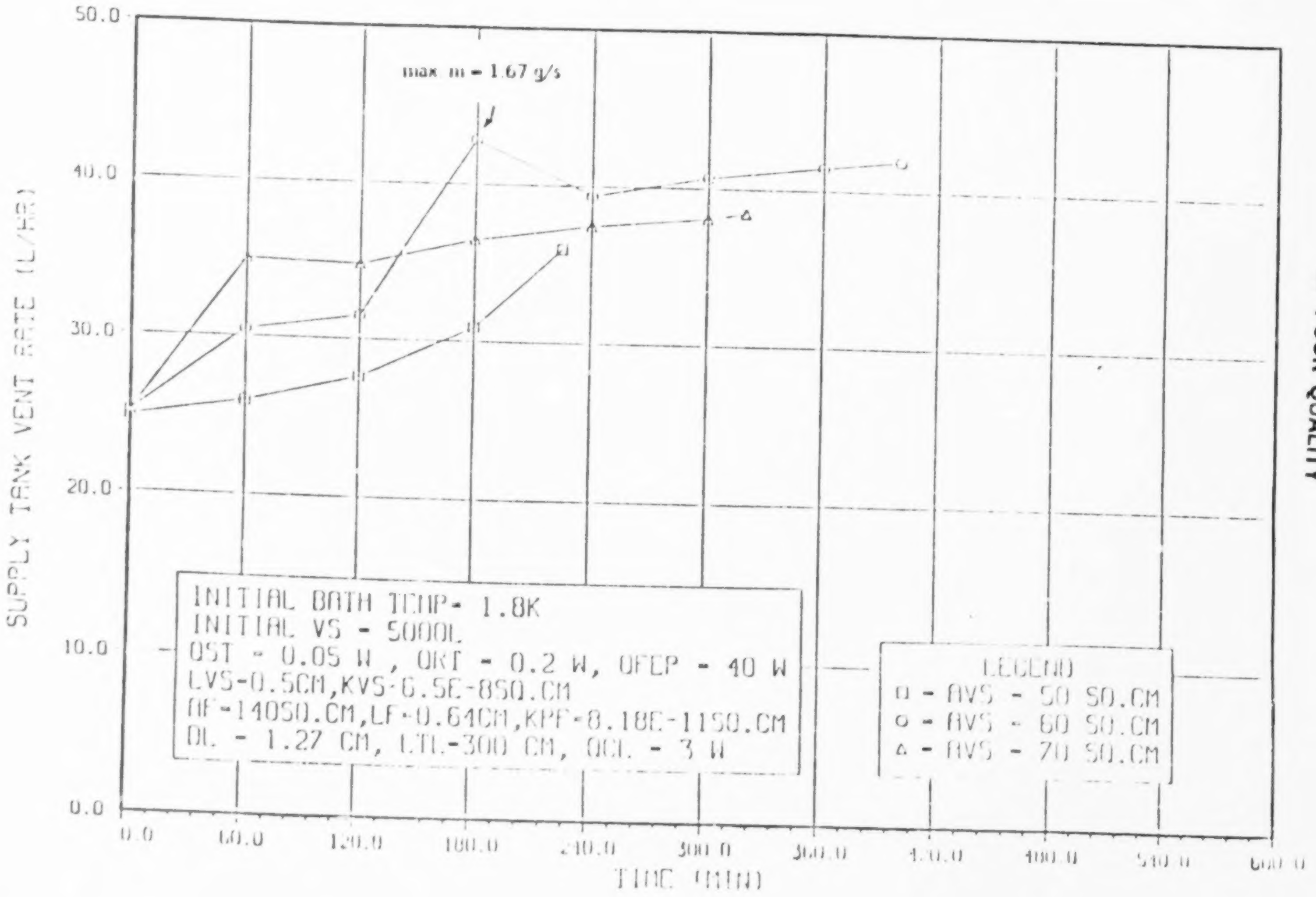

ORIGINAL PAGE IS OF POOR QUALITY

- FOR ALL THREE CASES STUDIED, THE RECEIVING TANK TEMPERATURES DO NOT EXCEED 2K
- RESULTS SHOW THAT VENTING OF THE RECEIVING TANK MIGHT NOT BE NECESSARY DURING HELIUM TRANSFER.

SFHT

SCENARIO 2
RECEIVER TANK TEMPRATURE VS TIME

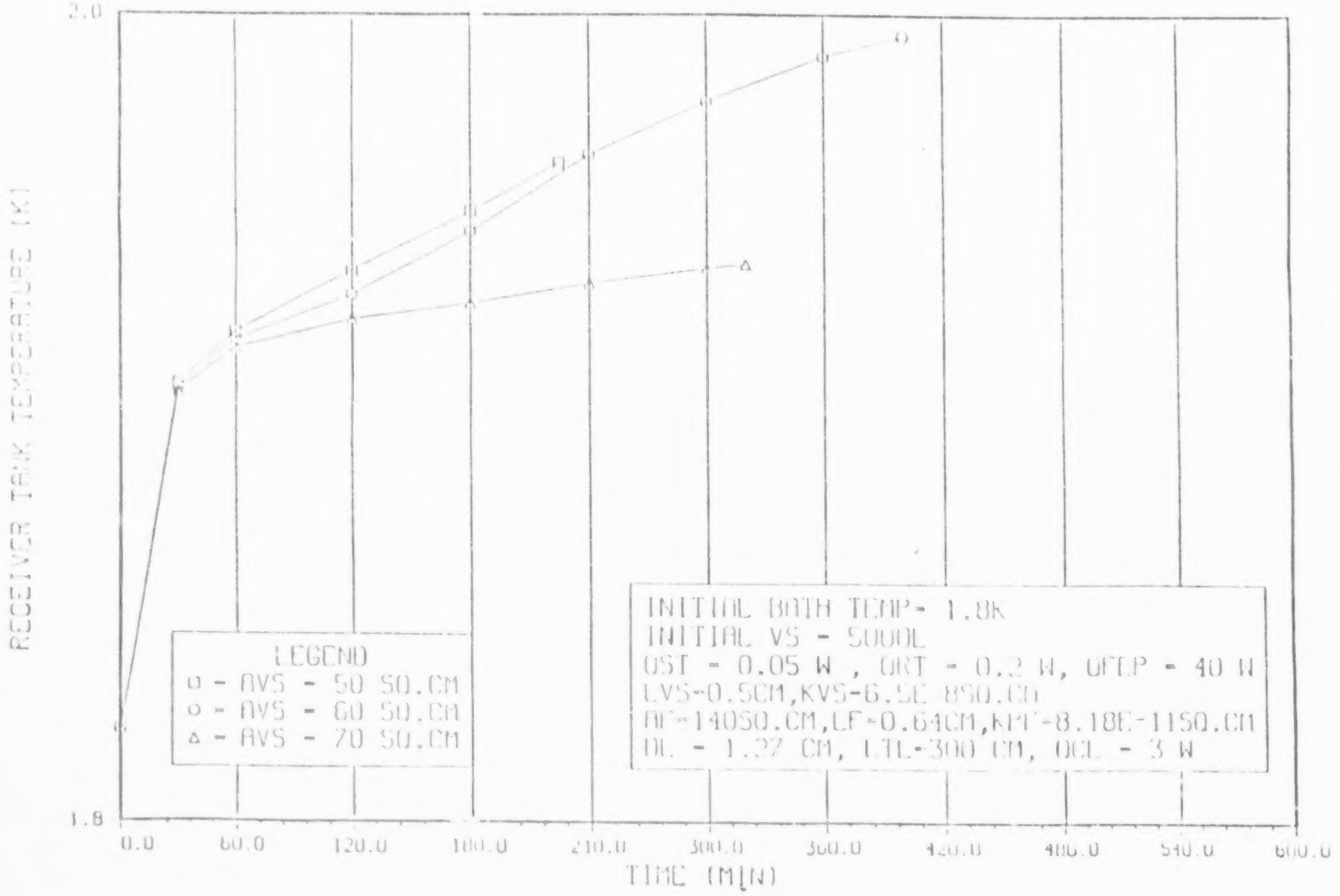

ORIGINAL PAGE IS
OF POOR QUALITY

USING THE CORRECT VENT RATE (E.G., AVS = 70 CM^2), THE TRANSFER CAN BE COMPLETED IN THE SHORTEST PERIOD (~320 MINUTES)

SCENARIO 2
SUPPLY TANK VOLUME VS TIME

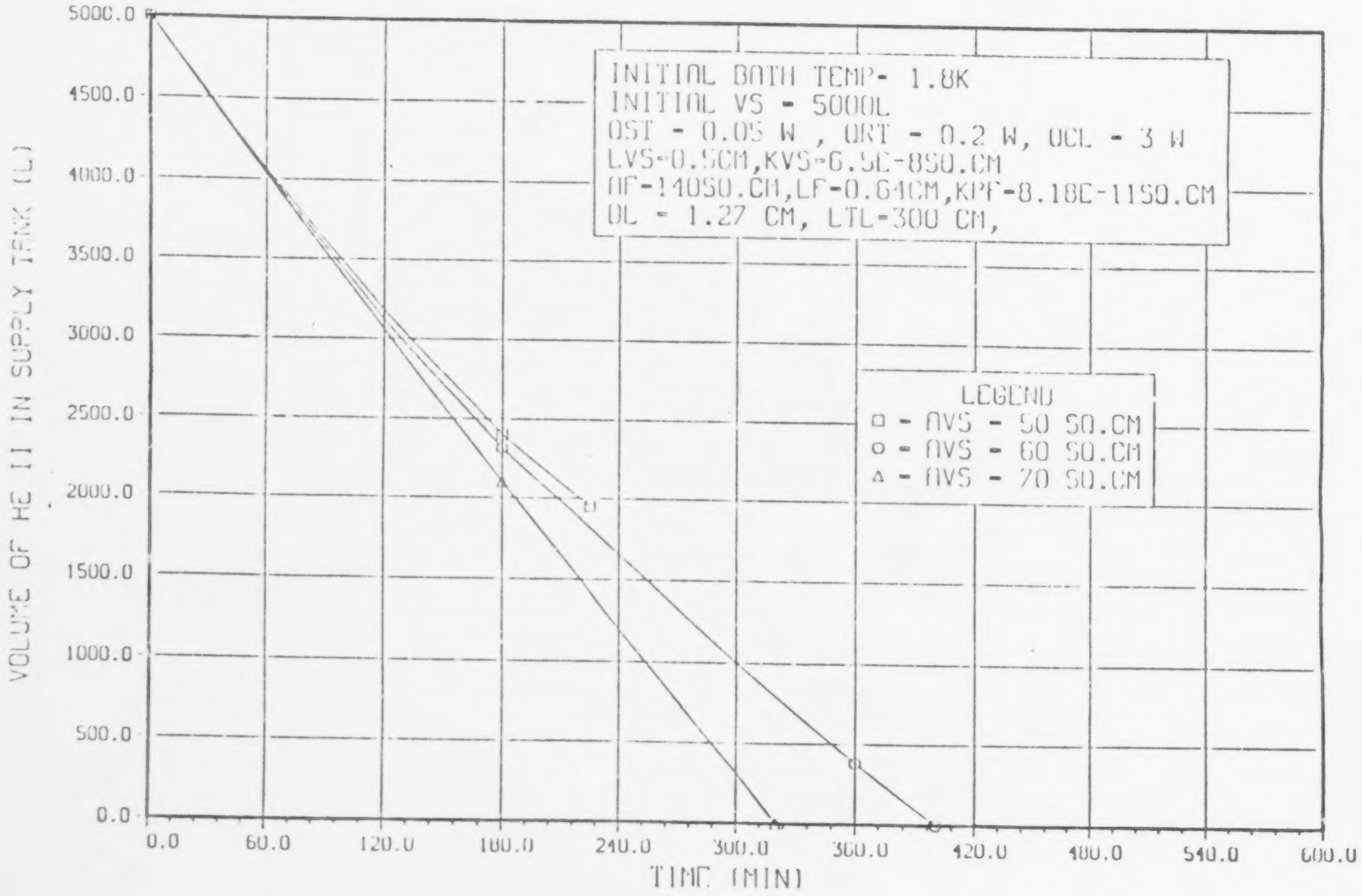

LONGER TRANSFER TIME RESULTS IN MORE FLUID LOSS THROUGH THE VENT LINE.

SCENARIO 2
VENTED HELIUM VERSUS TIME

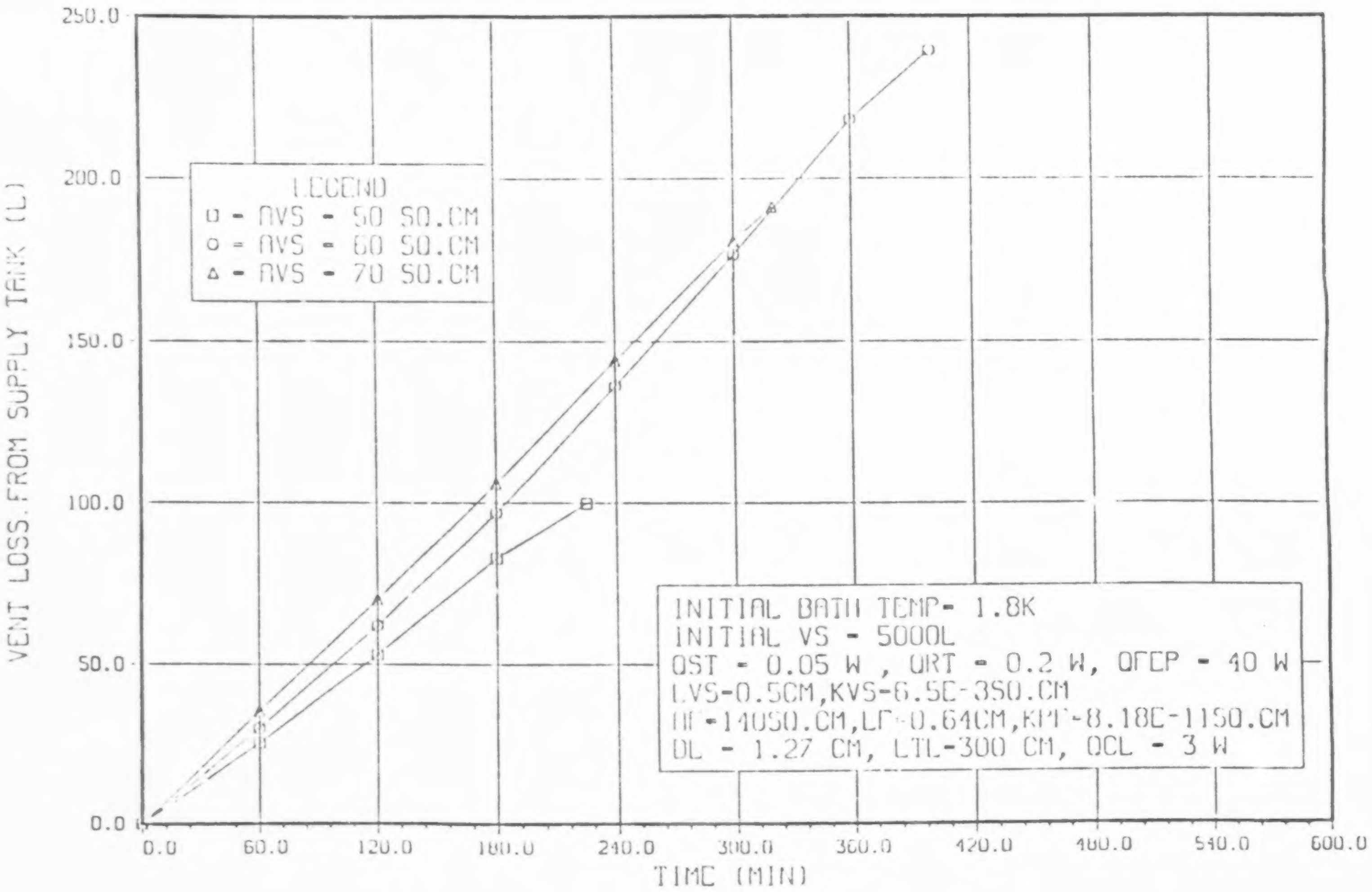

- SCENARIO 3 IS AN ANALOG TO SCENARIO 1 (200 L OF FLUID IS TRANSFERRED INSTEAD OF 5000 L).
- EFFECT OF VARIOUS HEATER POWER IS STUDIED.
- LESS THAN HALF OF THE SUPPLY TANK QUANTITY CAN BE TRANSFERRED WITH NO VENTING.

SFHT

SCENARIO 3
SUPPLY TANK VOLUME VS TIME

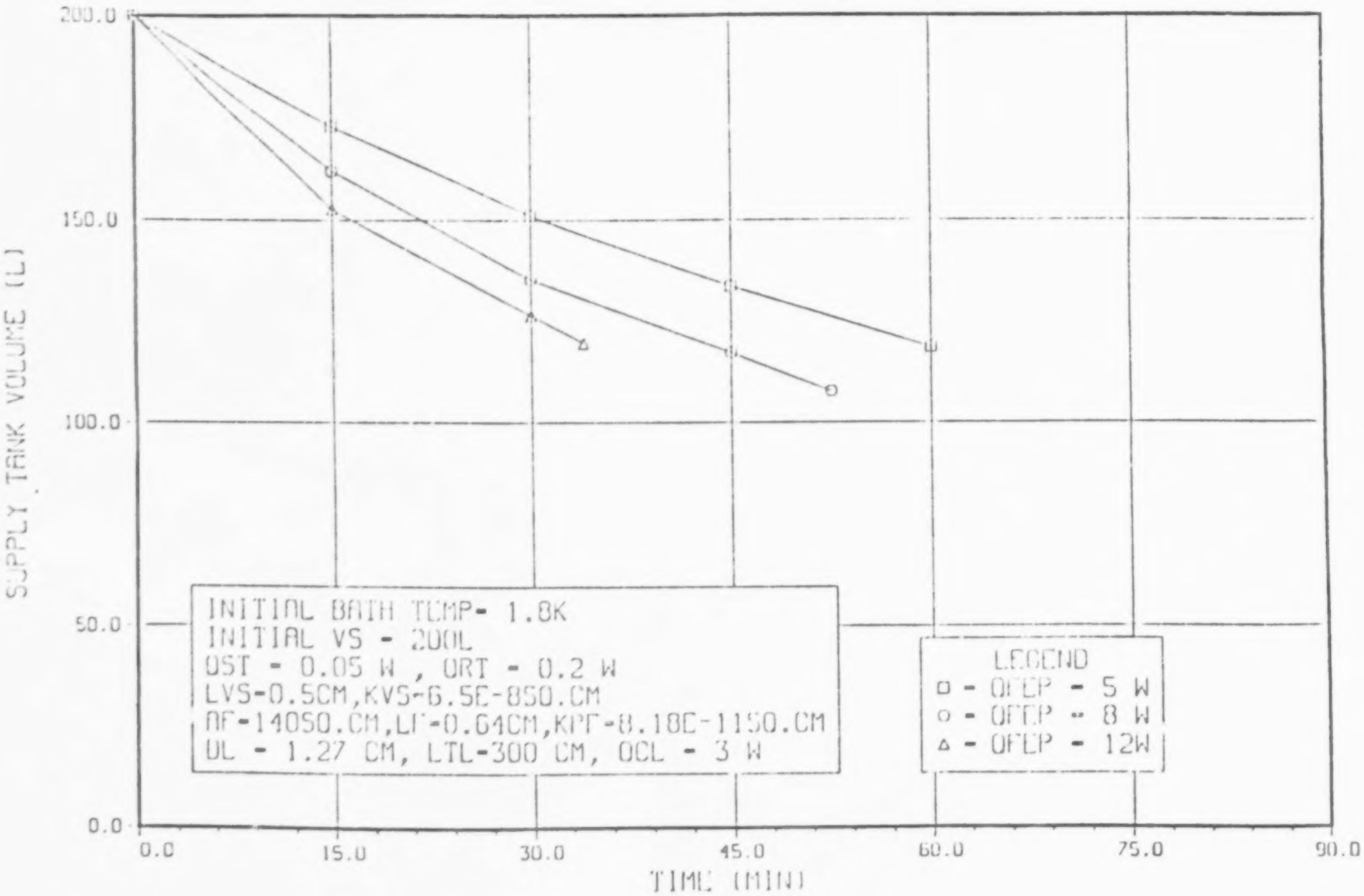

THIS SCENARIO ALSO DEMONSTRATES LOW FLOW RATE OF FEP WITH SMALL HEATER POWER INPUT.

SFHT

SCENARIO 3
VOLUMETRIC FLOW RATE VS TIME

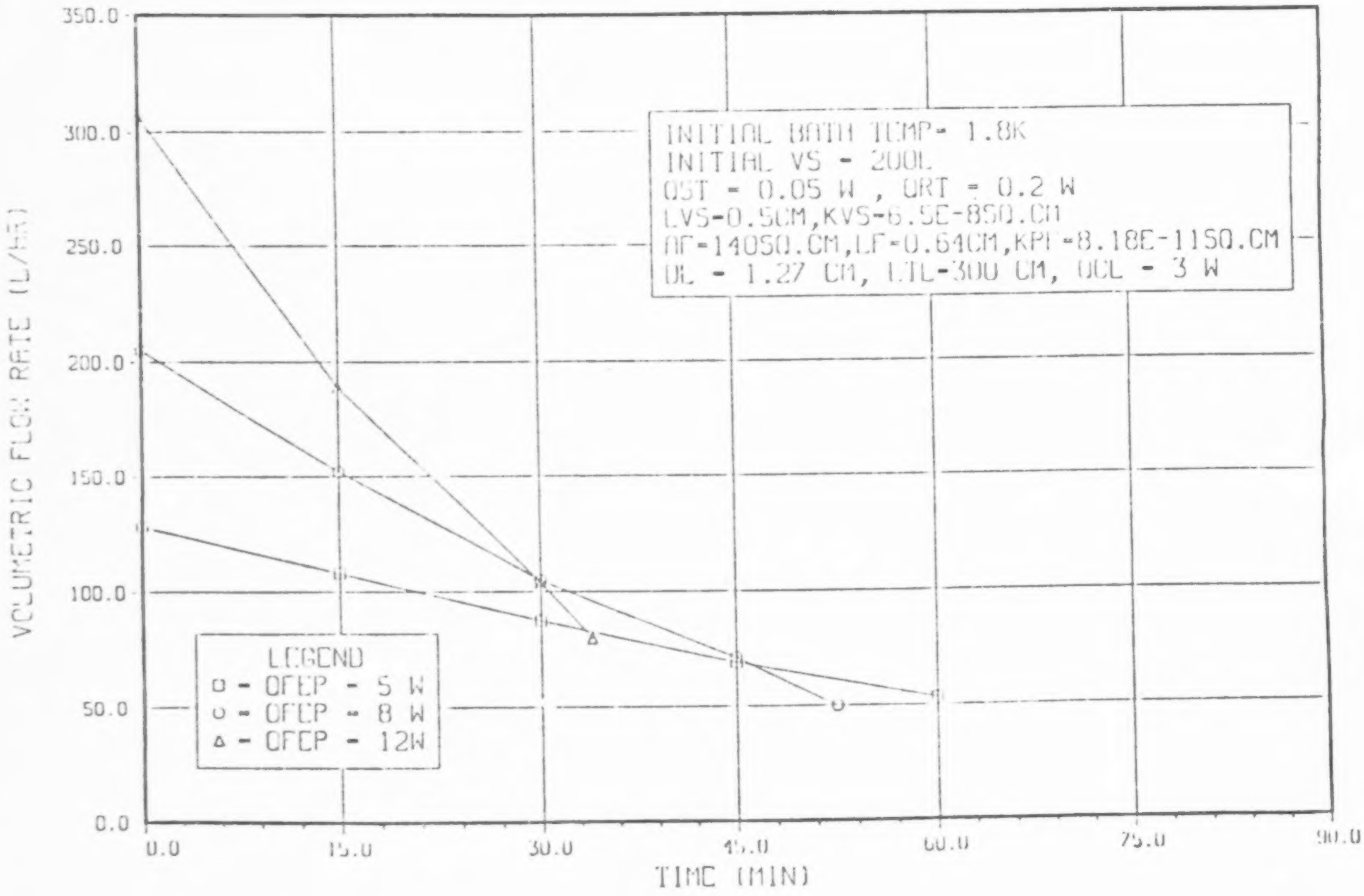

- AT THE BEGINNING OF THE TRANSFER, THE RECEIVING TANK TEMPERATURE (T_R) RISES SHARPLY DUE TO THE LOW HEAT CAPACITY OF THE FLUID.
- AS THE TIME PROCEEDS, THE RISE IN BATH TEMPERATURE TAILS OFF AS THE HEAT CAPACITY OF THE FLUID INCREASES.
- WITH LARGE PARASITIC HEAT LOAD ON THE TRANSFER LINE AND SMALL FLOW RATES, ONE HAS TO BE CAREFUL NOT TO LET $T_R > T_\lambda$ (E.G., QFEP = 5W).

SFHT

SCENARIO 3
RECEIVER TANK TEMPERATURE VS TIME

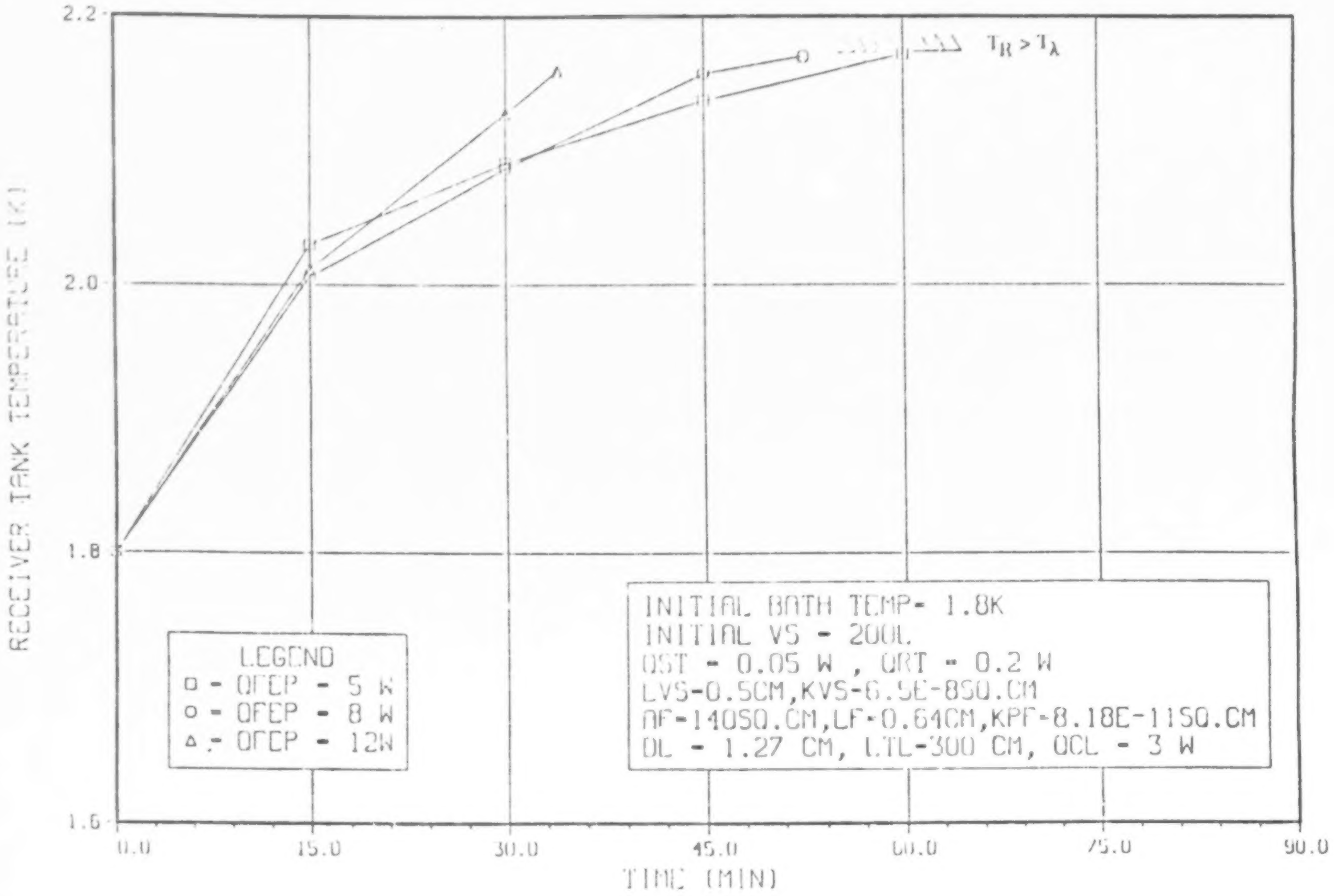

- FOR ALL THREE CASES WITH NO VENTING, THE TRANSFER COMPUTATION HAS TO BE TERMINATED PREMATURELY.
- WITH QFEP = 5W, T_R EXCEEDS T_λ.
- WITH QFEP = 8 AND 12 W, $T_H > T_\lambda$.

SFHT

SCENARIO 3
DOWNSTREAM FEP TEMPERATURE VS TIME

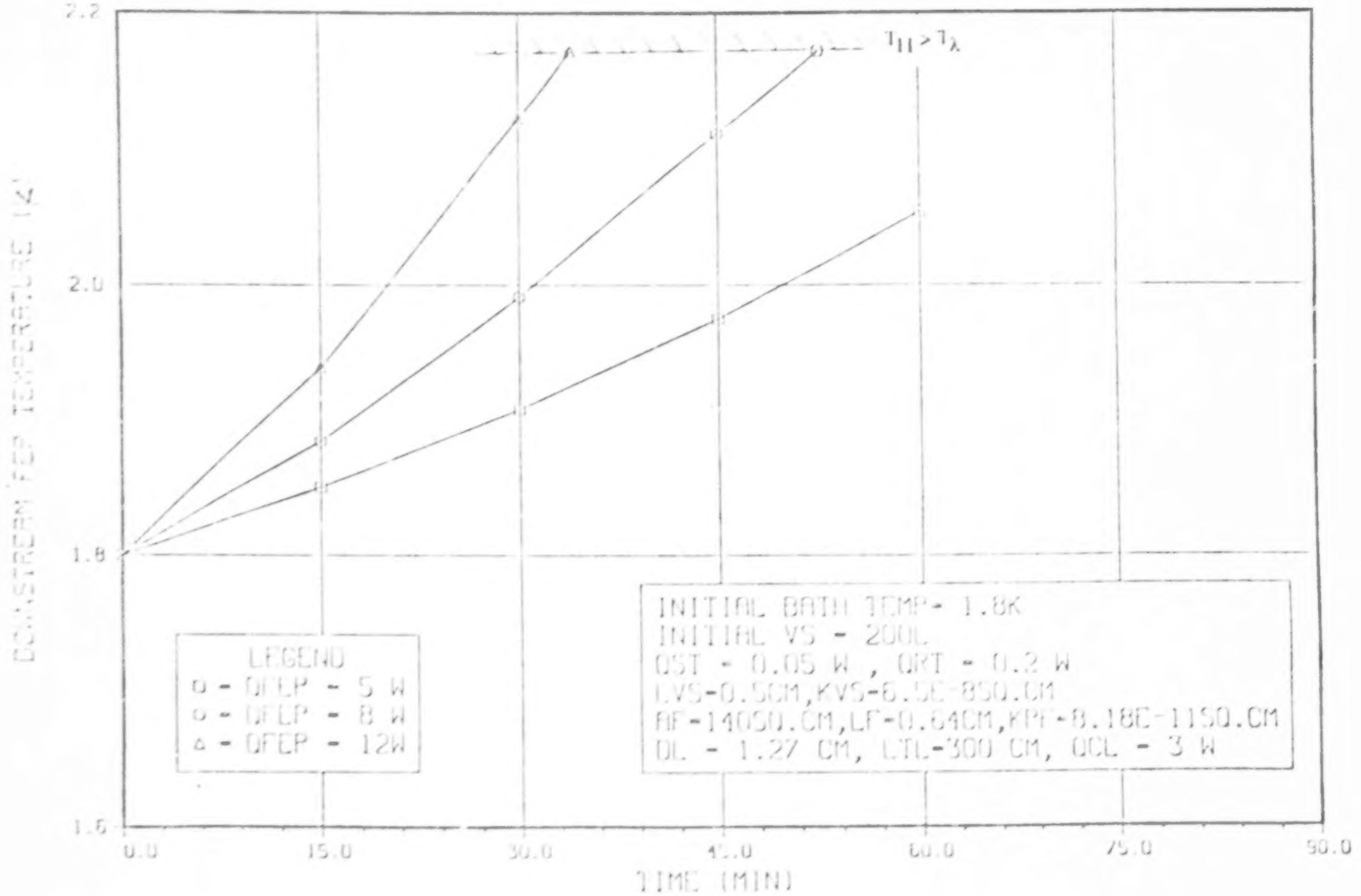

- SCENARIO 4 IS AN ANALOG TO SCENARIO 2. 200 L OF HE-II IS TRANSFERRED INSTEAD OF 5000 L.
- THE EFFECT OF VENT RATES ON THE TRANSFER IS STUDIED.
- MAXIMUM VENT RATE IN THIS SCENARIO IS 5 L/HR OR 0.2 G/S.

SFHT

SCENARIO 4
SUPPLY TANK VENT RATE VS TIME

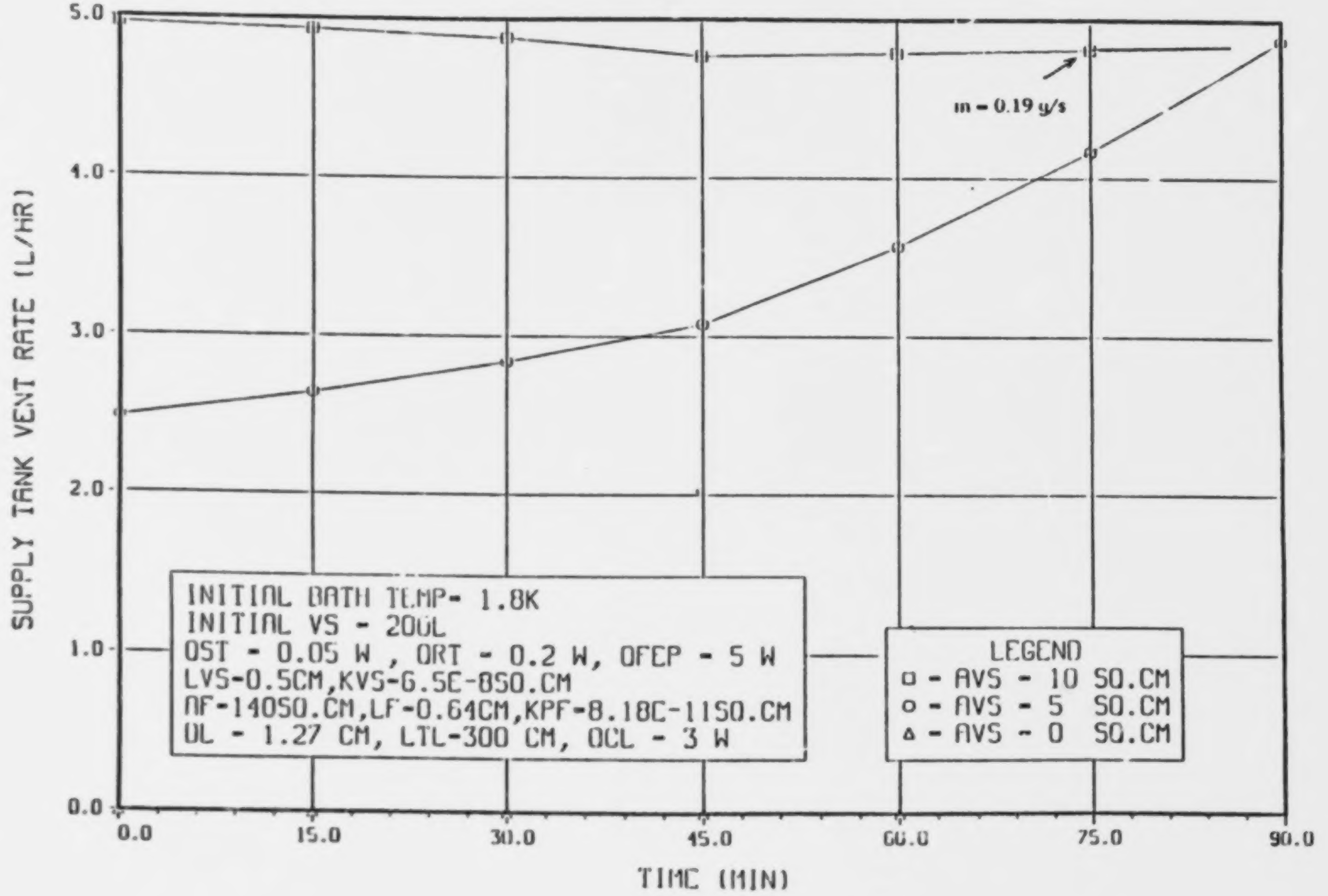

2-2

THE EQUIVALENT LIQUID LOSS THROUGH THE VENT IS ~8 L OR ~4% (FOR AVS = 10 CM^2).

SFHT

SCENARIO 4
VENTED HELIUM VS TIME

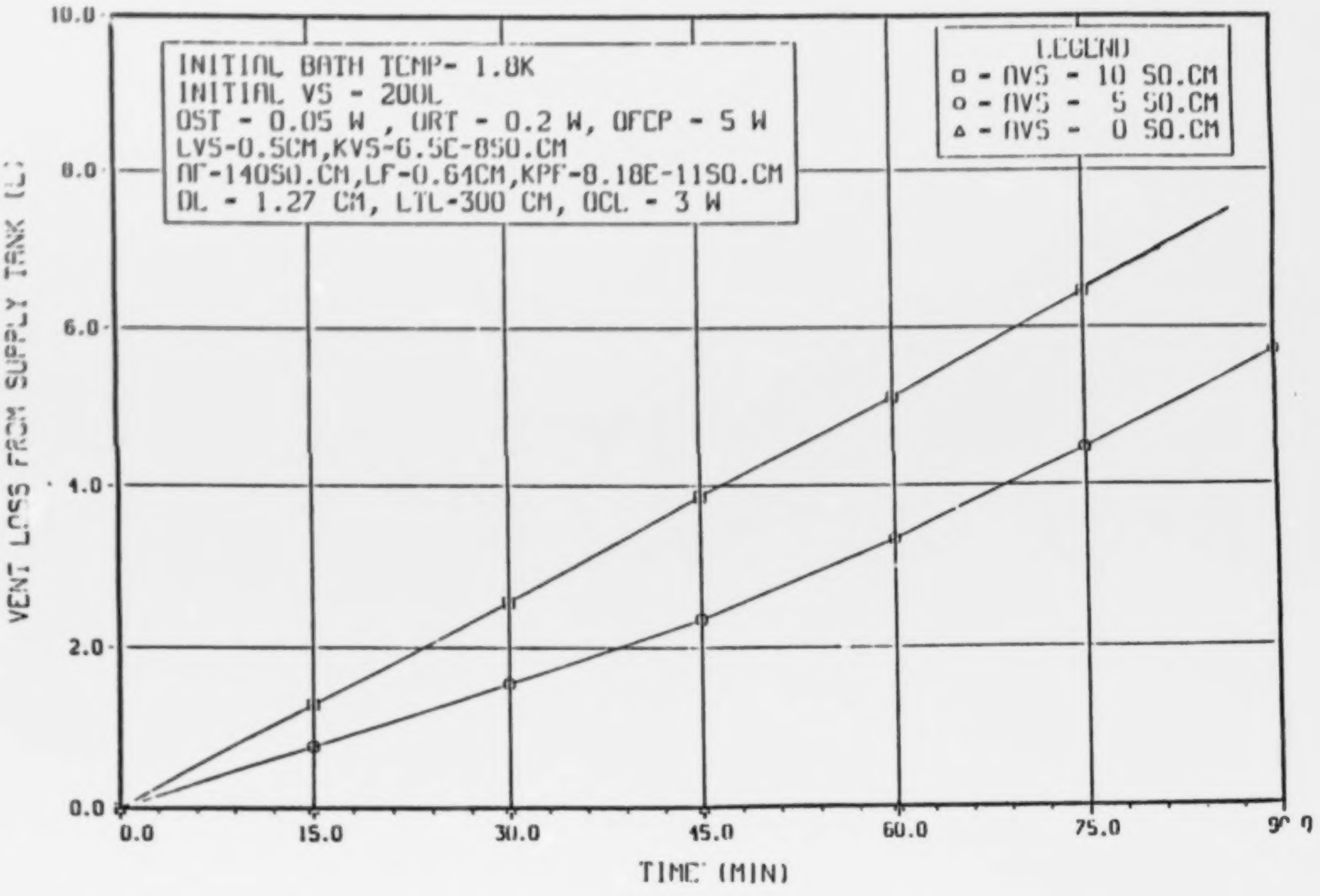

- WITH AVS = 10 CM^2, THE TRANSFER IS COMPLETED IN LESS THAN 1.5 HR.
- FOR AVS = 0 AND 5 CM^2, THE TRANSFER COMPUTATION HAS TO BE TERMINATED PREMATURELY.

SFHT

SCENARIO 4
SUPPLY TANK VOLUME VS TIME

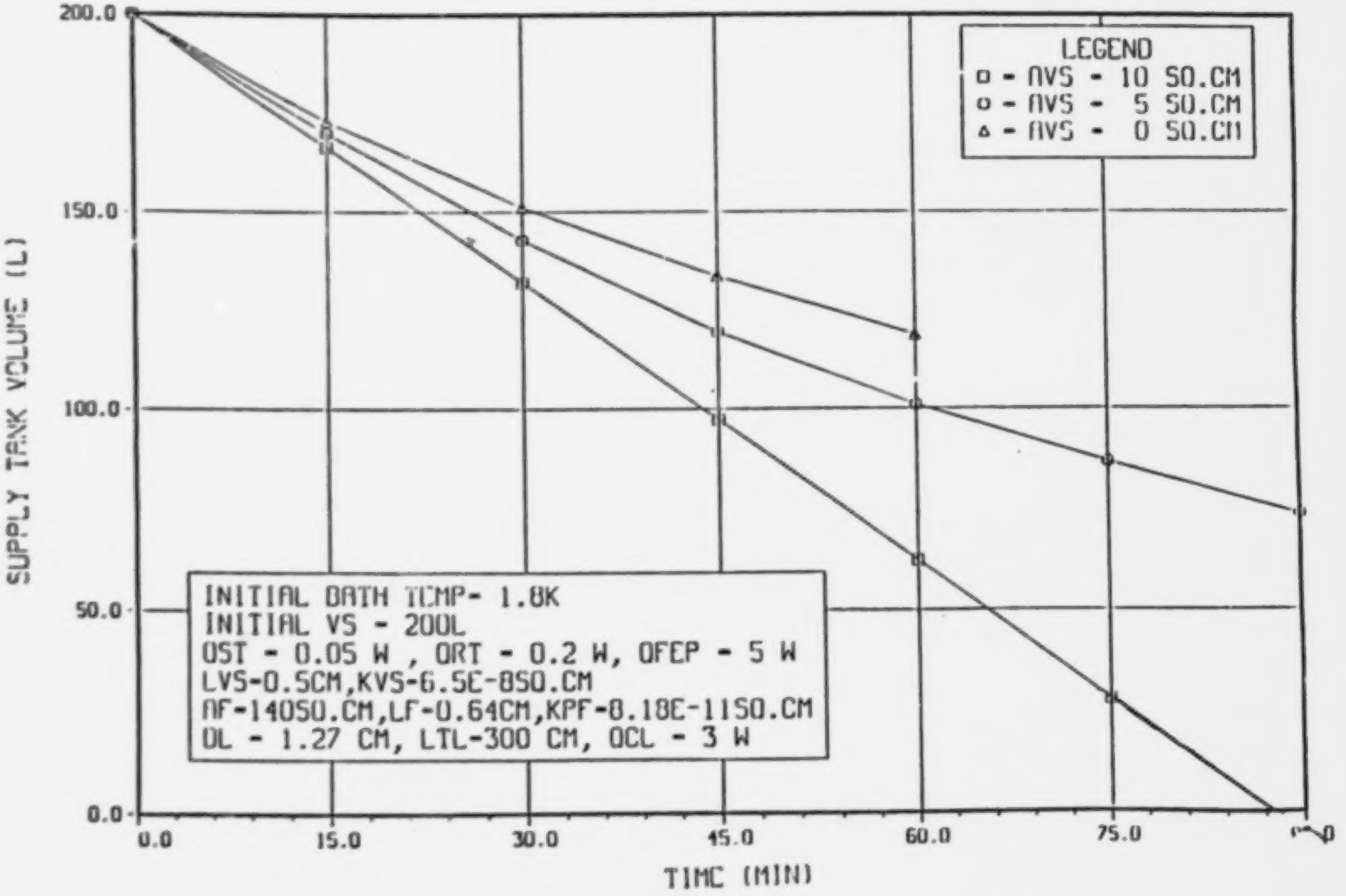

- VOLUMETRIC FLOW RATE WITH AVS = 10 CM^2 IS ALMOST CONSTANT AT 130 L/HR.
- FOR THE OTHER TWO CASES, THE FLOW RATE DROPS AS THE ACCUMULATION OF NORMAL FLUIDS INCREASES.

SFHT

SENARIO 4
VOLUMETRIC FLOWRATE VS TIME

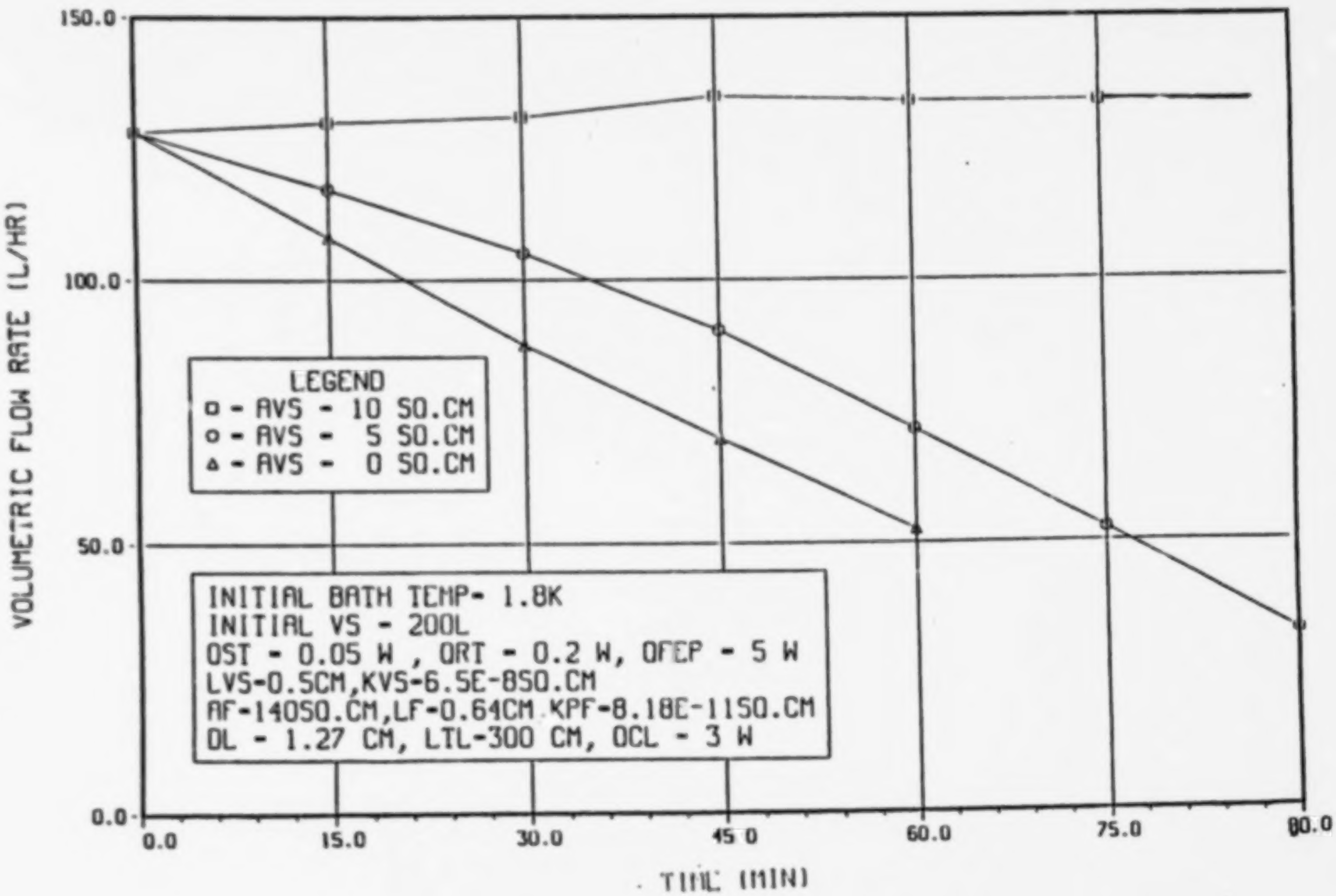

FOR ADEQUATE VENTING THROUGH THE PHASE SEPARATOR, T_H SHOULD STAY CONSTANT.

SFHT

SCENARIO 4
DOWNSTREAM FEP TEMPERATURE VS TIME

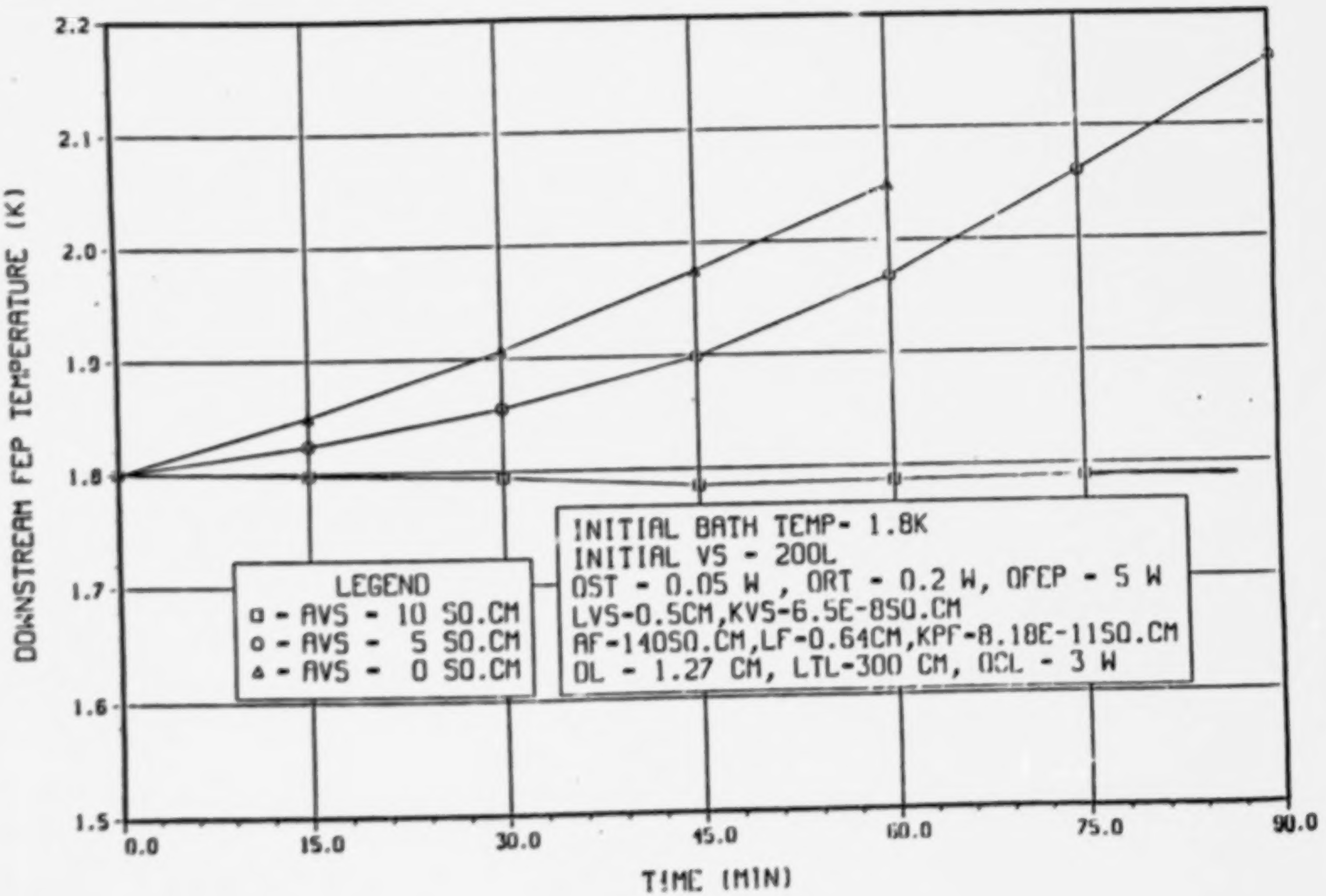

- FOR INADEQUATE VENTING (OF THE SUPPLY TANK) AND LOW FLOW RATE, THE RECEIVING TANK TEMPERATURE $T_{[illegible]}$ TENDS TO EXCEED T_{λ} BEFORE THE DOWNSTREAM FEP TEMPERATURE T_H.

SFHT

SCENARIO 4
RECEIVER TANK TEMPERATURE VS TIME

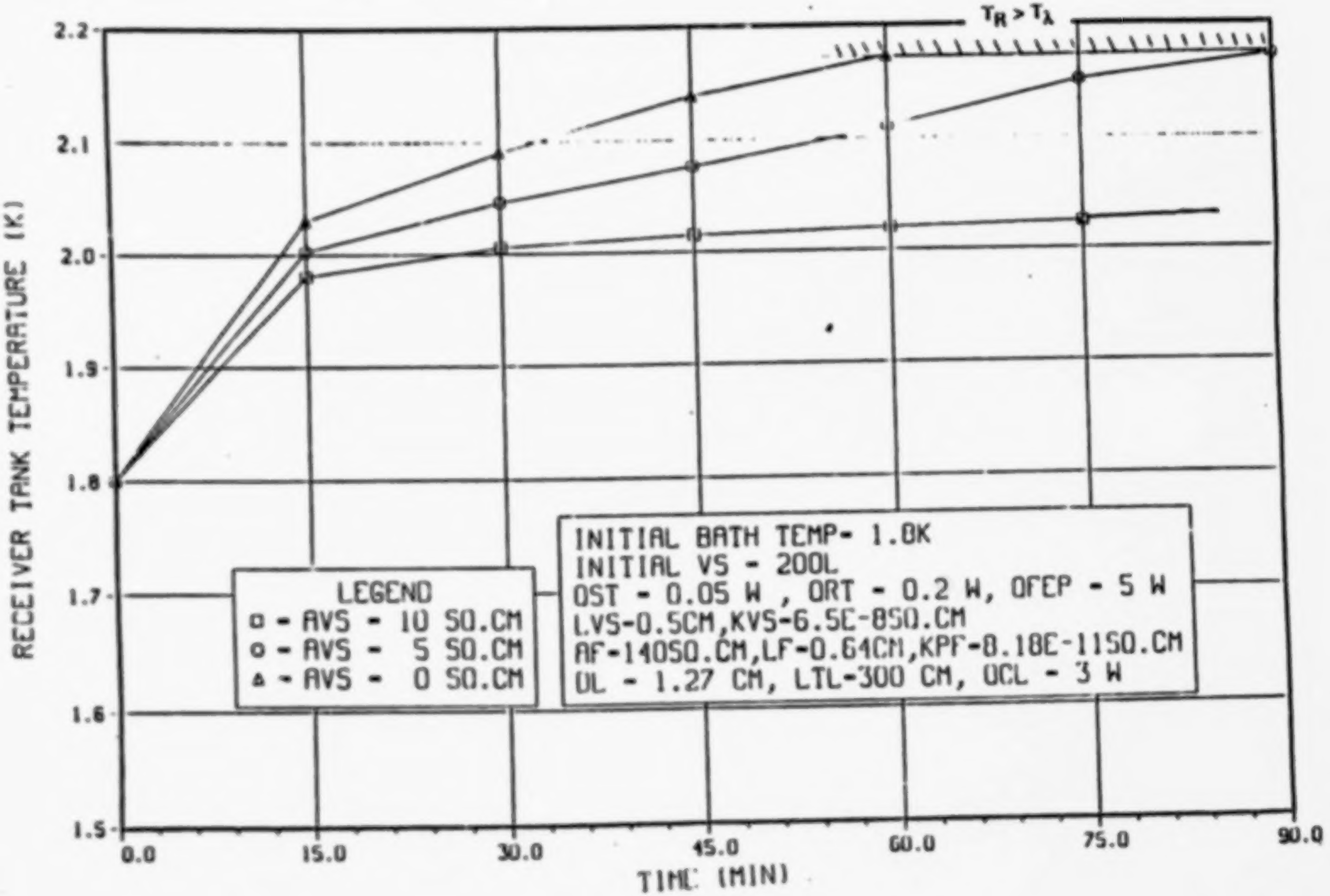

SFHT

PRINCIPAL RESULTS FROM TRANSFER STUDIES

- FOR THE CASES STUDIED, NO VENTING OF THE RECEIVER TANK IS REQUIRED.
- APPROXIMATELY HALF OF THE TANKER QUANTITY CAN BE TRANSFERRED WITHOUT ANY VENTING.
- THE MAXIMUM VENTING RATE FOR THE CASES IS 1.67 gm/sec, (SCENARIO NO. 2)
- THE FEP SATISFIES A WIDE RANGE OF FLOW RATES.
- A FIXED PHASE SEPARATOR AREA CAN BE UTILIZED FOR A WIDE RANGE OF CONDITIONS.

LIQUID MANAGEMENT

- THIS DATA SHOWS THE COMPARISON BETWEEN STORABLE PROPELLANTS, OTHER CRYOGENIC FLUIDS, AND HE-II.
- THE PRINCIPAL FLUID PARAMETER FOR LIQUID MANAGEMENT IS THE KINEMATIC SURFACE TENSION.
- THE BOND NUMBER AS A FUNCTION OF ACCELERATION AND TANK RADIUS IS SHOWN. IT IS CLEAR THAT THE LOCATION OF FLUID IS DOMINATED BY ACCELERATION (WITHOUT A LIQUID MANAGEMENT DEVICE).

SFHT

He II SURFACE TENSION AND BOND NUMBER

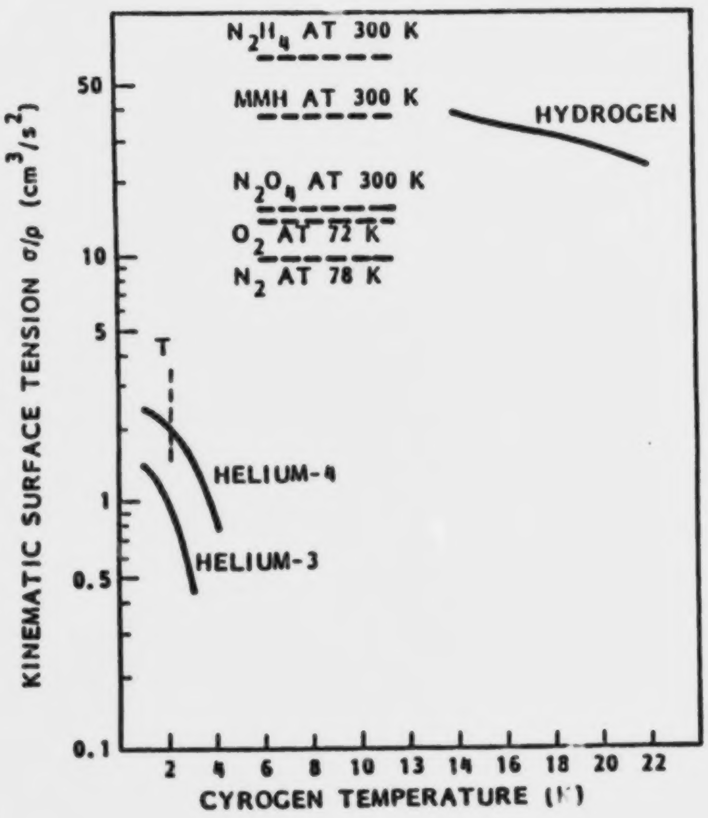

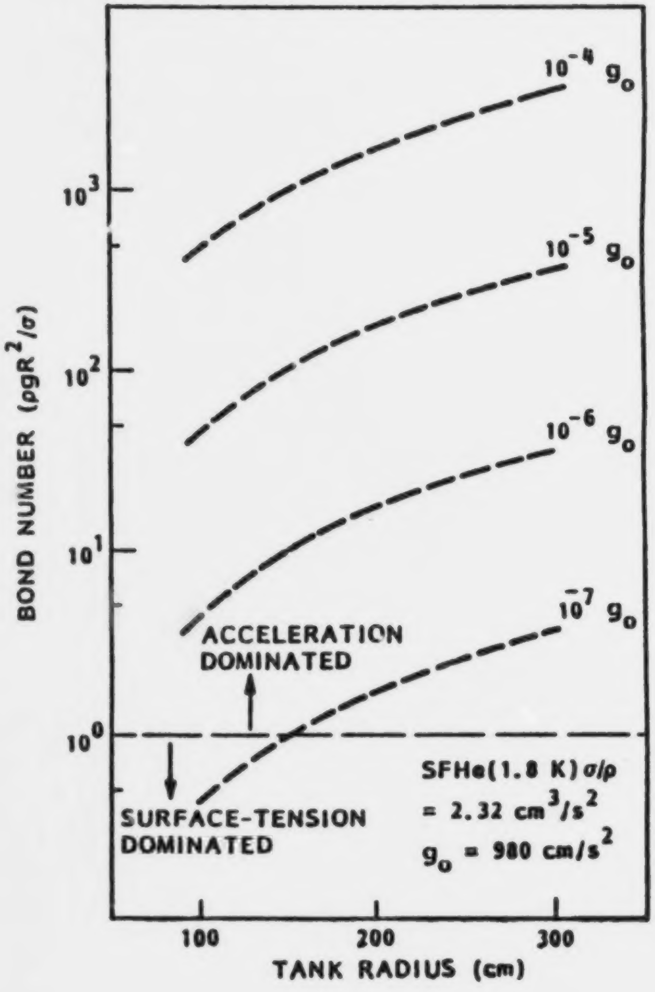

- THIS CHART SUMMARIZES THE DESIGN REQUIREMENTS WHICH WERE ESTABLISHED FOR THE NASA/AMES CONTRACT NAS2-12051 FOR STUDY OF THE LMD FOR SFHT.
- THESE RESULTS WERE UTILIZED FOR THE SFHT DESIGN.

SFHT

REQUIREMENTS

Tank Volume: 13,000 L

Flow Rate: nominal 500 L/h, goal 1,000 L/h

Temperature: 1.8 ± 0.05 K

Maximum Orbital Accelerations: steady 10^{-4} g_0 (any direction)

Minimum Expulsion Efficiency: 95 percent

Structural Loads: cool-down from 300 K, 12 g_0 static load, random vibration at TBD, multiple flights

Maximum Thermal Load: 0.5 W parasitic, 50 W pump dissipation

Submerged Pump Envelope: 5 in. diameter, 6 in. high

- A FACTOR OF THREE CONSERVATISM IN CAPILLARY CAPABILITY IS USED IN THE STUDY.

THE APPROPRIATE MODELS (TWO FLUID MODELS, ETC.) WERE UTILIZED TO STUDY THE CHARACTERISTICS OF HE-II WITH THE GALLERY ARM SYSTEM, AND DEFINE THE IMPORTANT DESIGN PARAMETERS.

- CAPILLARY RETENTION MUST OVERCOME ALL PRESSURE LOSSES

$$\Delta P_{min\ capillary} > \Delta P_{max\ hydrostatic} + \Delta P_{max\ dynamic} + \Delta P_{max\ friction} + \Delta P_{max\ entrance}$$

- HYDROSTATIC HEAD COMPUTED AT 10^{-4} g_o ACCELERATION AT DEPLETION.
- DYNAMIC HEAD COMPUTED WITH ALL FLOW IN A SINGLE CHANNEL.

- CHANNEL FRICTION LOSSES COMPUTED WITH MODIFIED BLASSIUS EQUATION WITH ALL FLOW IN A SINGLE CHANNEL.

$$\frac{\rho D^3}{32\ \eta_n^2} \Delta P = 4.94 \times 10^{-3} \left(\frac{D\rho V}{\eta_n}\right)^{7/4}$$

- SCREEN PRESSURE LOSS IS COMPUTED WITH TWO FLUID MODEL

$$V = V_n + \frac{\rho_S}{\rho}(V_S - V_n)$$

$$= V_n + \frac{\rho_S}{\rho}\left(\frac{\nabla P}{A_{GM}\rho\rho_n}\right)^{1/3}$$

$$V_n = \frac{-\alpha}{2\beta}\ \frac{a^2\ \epsilon\ D_o\ \eta_n}{\rho} + \left(\frac{\alpha^2\ a^4\ \eta_n^2\ D_o^2}{4\beta^2\ \rho^2} + \frac{\epsilon^2\ D_o}{\beta Q\rho}\nabla P\right)^{1/2}$$

THIS FIGURE SHOWS SOME OF THE DESIGN FEATURES OF THE TERMINATION OF THE GALLERY ARMS.

SFHT

GALLERY DEVICE (1 OF 3)

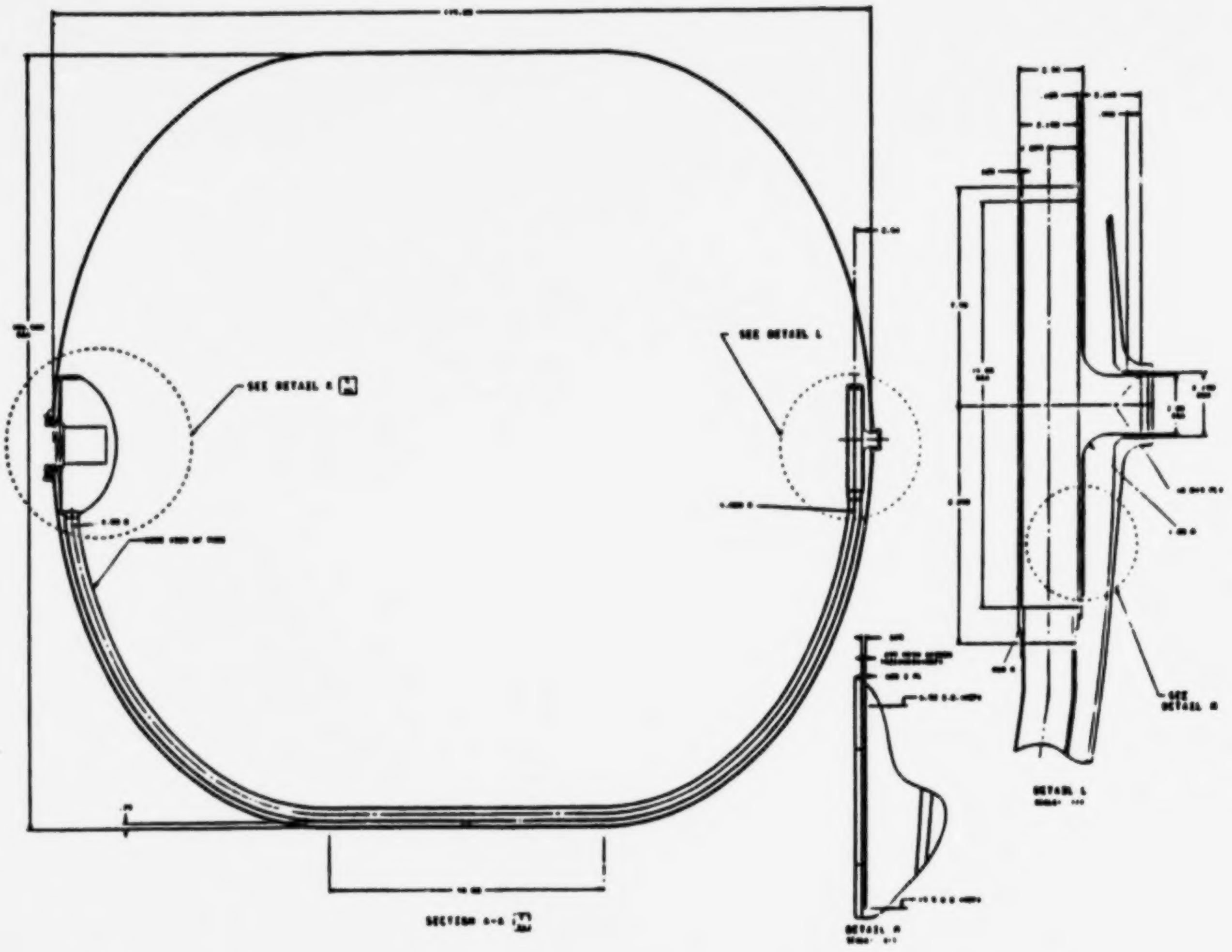

ORIGINAL PAGE IS
OF POOR QUALITY

- Some of the principal design features of this LMD are shown.
- This shows some of the detail of the gallery arms and junction of the arms.

SFHT

GALLERY DEVICE (2 OF 3)

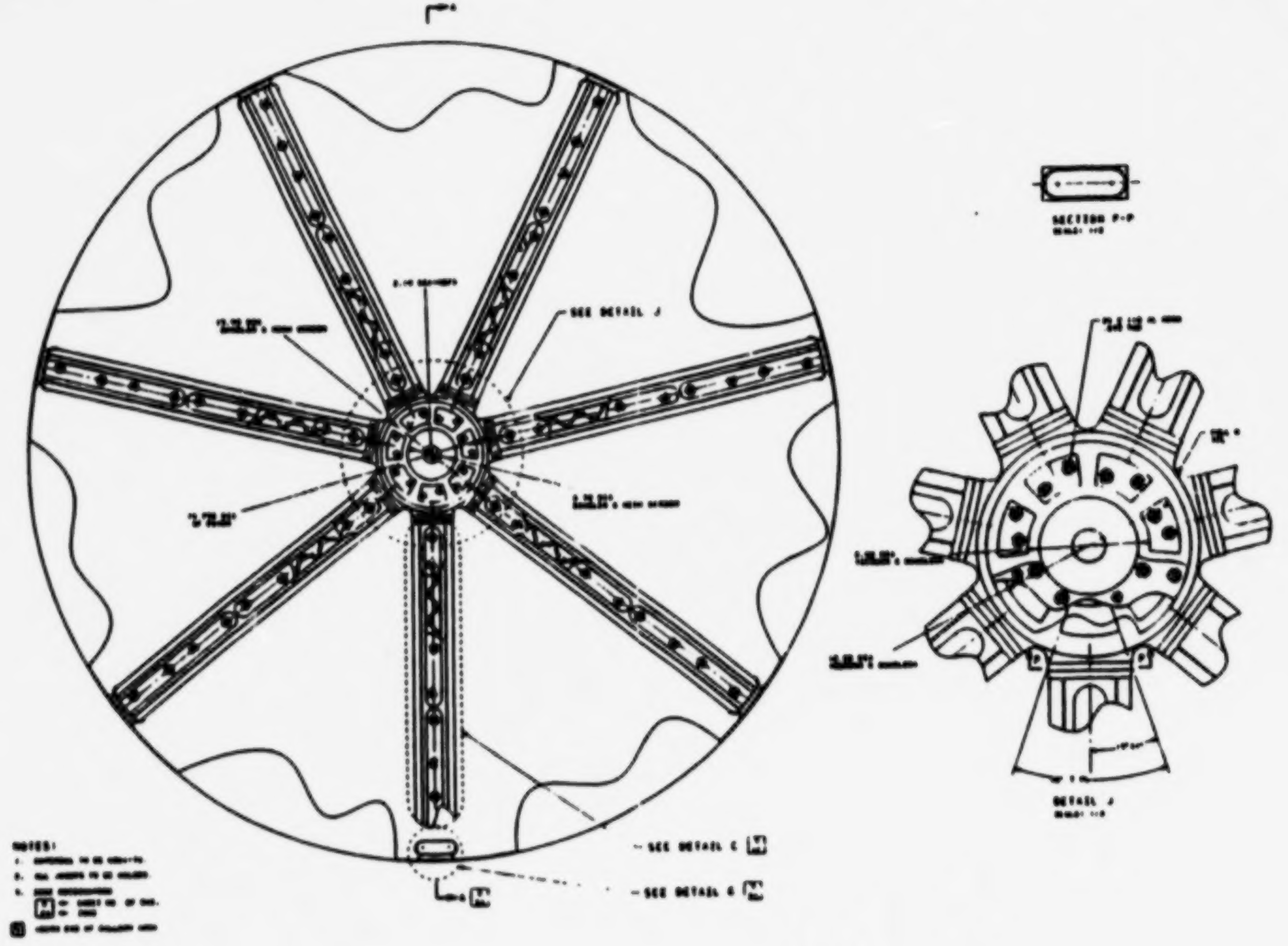

ORIGINAL PAGE IS
OF POOR QUALITY

THIS FIGURE SHOWS THE DESIGN OF THE SUMP IN WHICH THE PUMP IS LOCATED AND SHOWS A TYPICAL INTERFACE BETWEEN THE TANK AND THE GALLERY ARMS WITH THE SUMP.

SFHT

GALLERY DEVICE (3 OF 3)

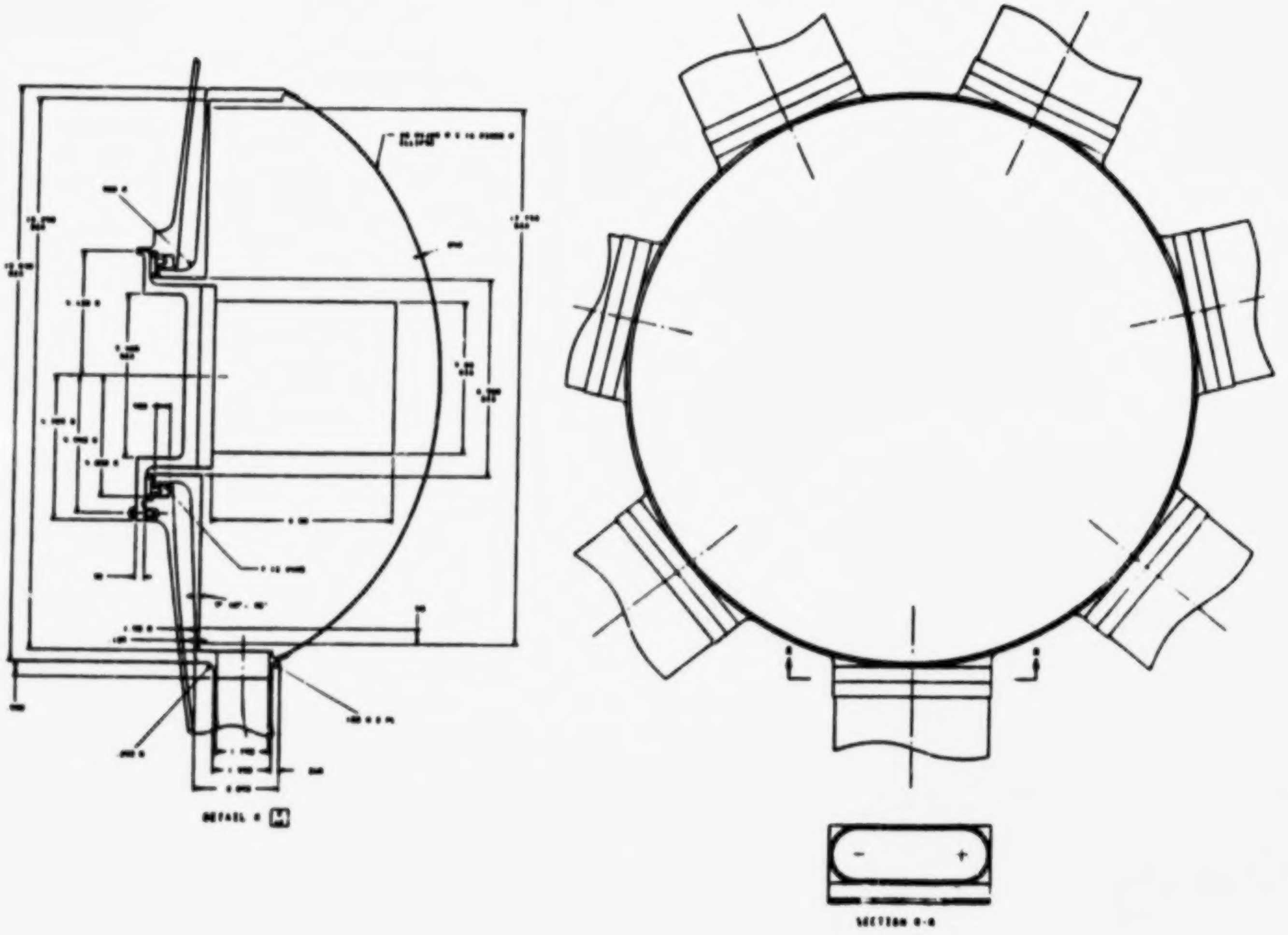

ORIGINAL PAGE IS
OF POOR QUALITY

BULK LIQUID RESIDUAL

- VAPOR IS INGESTED INTO GALLERY CHANNELS WHEN THE SCREEN FLOW LOSS INCREASES SUFFICIENTLY AND THE SUM OF ALL LOSSES EXCEED THE SCREEN CAPILLARY RETENTION CAPABILITY

$$h_{screen} = h_{cap} - h_{hyd.} - h_{dyn} - h_{friction}$$

Pressure Losses (g_o-cm)	Flowrate (L/h)	
	500	1,000
Hydrostatic	0.0290	0.0290
Dynamic	0.0069	0.0277
Channel friction	0.0063	0.0212
Total	0.0422	0.0779

- 50 X 250 MESH SCREEN CAPILLARY CAPABILITY IS 0.2818 g_o-CM. THEREFORE THE SCREEN MAXIMUM ALLOWABLE LOSS IS 0.2396 g_o-CM @ 500 L/h AND 0.2039 g_o-CM @ 1000 L/h.

LIQUID RESIDUAL

- THE MAXIMUM RESIDUAL QUANTITY IN THE BULK SPACE OCCURS WHEN THE ACCELERATION SETTLES THE LIQUID BETWEEN TWO GALLERY CHANNELS.

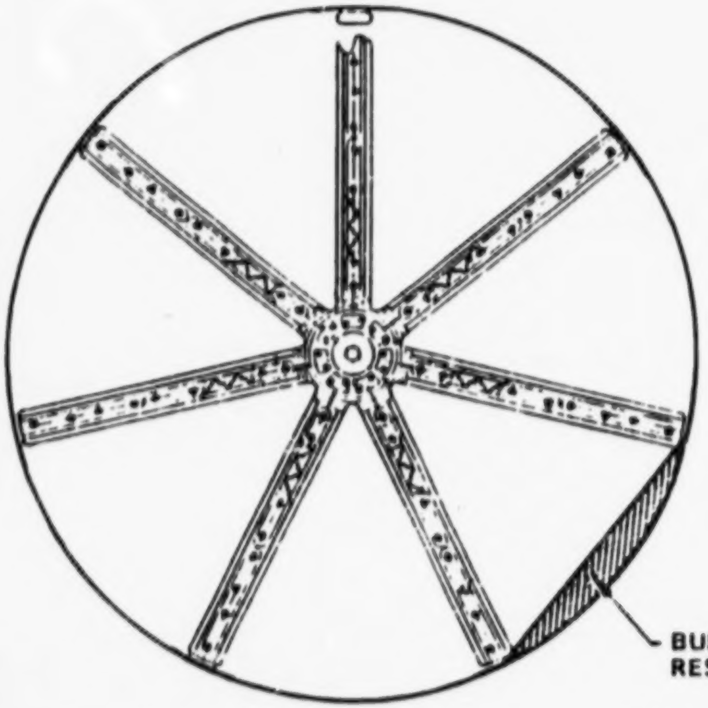

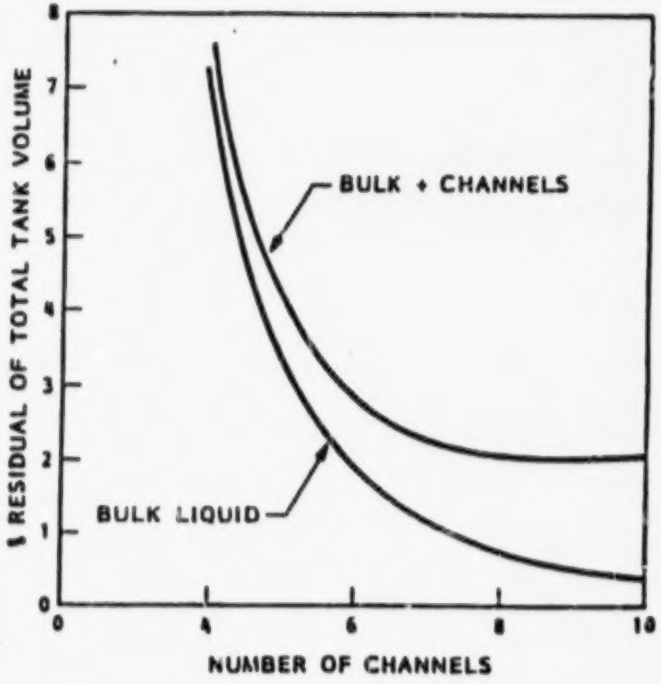

- CHOICE OF SEVEN CHANNELS MEETS THE 5% REQUIREMENT BY A FACTOR OF 2.

- THE MASS GAGING SYSTEM IS INCLUDED IN THIS FIGURE.
- THE GAGING SYSTEM INCLUDES THE FOLLOWING ELEMENTS:
  - THE HEAT PULSE SYSTEM BEING DEVELOPED FOR SHOOT. IT WILL BE REDUNDANT AND IN BOTH THE SUPPLY AND RECEIVER TANKS.
  - A VENTURI TYPE FLOW METER IN THE SFHT.
  - A CONTINUOUS SUPERCONDUCTING LIQUID LEVEL GAGE IN BOTH SFHT TANKS AND IN THE RECEIVER.
  - AN ABSOLUTE PRESSURE GAGE IN THE RECEIVER, UTILIZED TO SIGNAL A FILLED (100%) TANK BY THE HYDROSTATIC PRESSURE RISE.

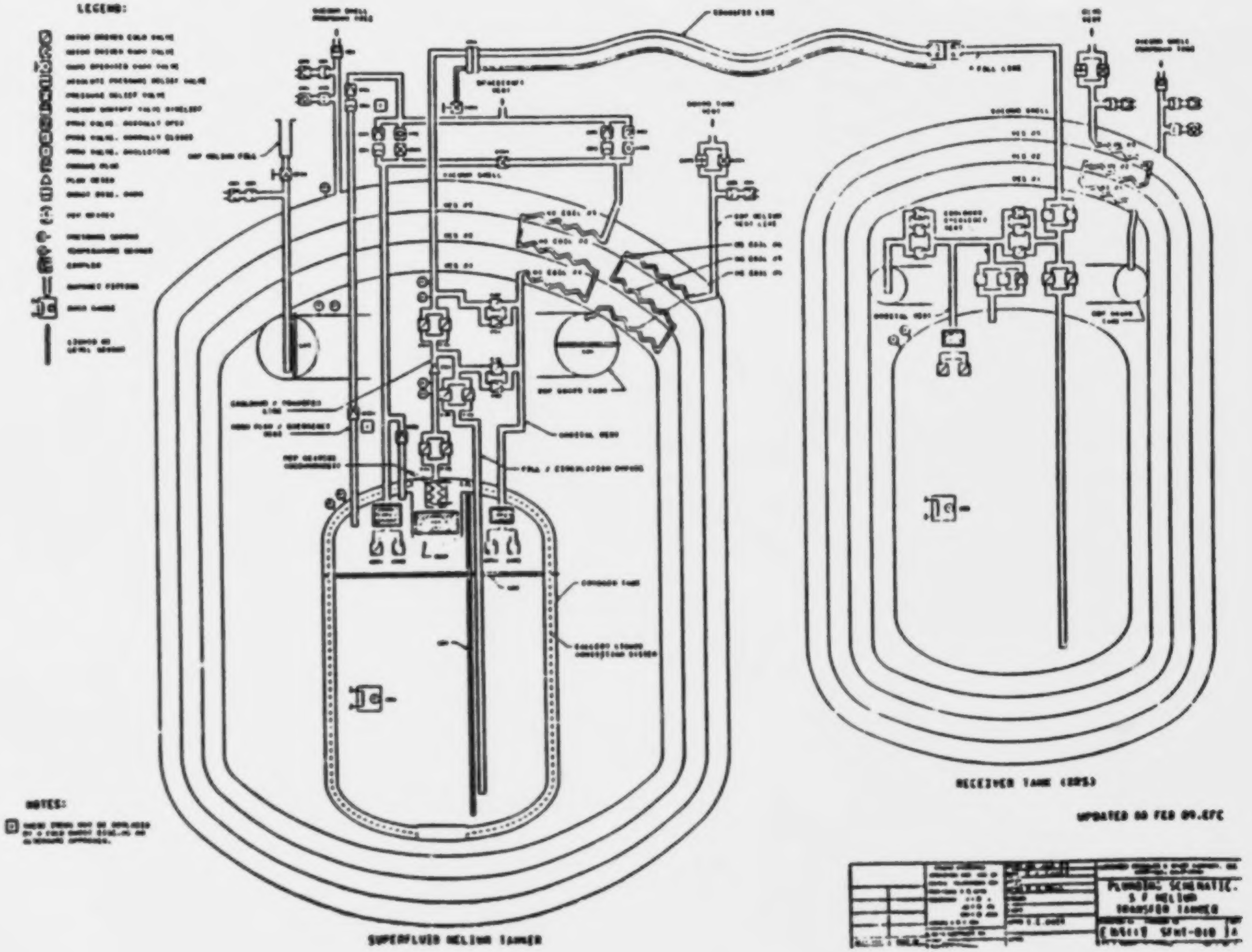

ORIGINAL PAGE IS
OF POOR QUALITY

- THIS FIGURE SHOWS THE VAPOR PRESSURE IN THE RECEIVER TANK DURING FILLING AND THE FEP PRESSURE.

- AT THE COMPLETION OF FILL THE TANK PRESSURE WILL "JUMP" TO THE FEP PRESSURE HEAD PROVIDING A CLEAR INDICATION OF THE TANK FILLING.

SFHT

PRESSURE WITHIN RECEIVER TANK

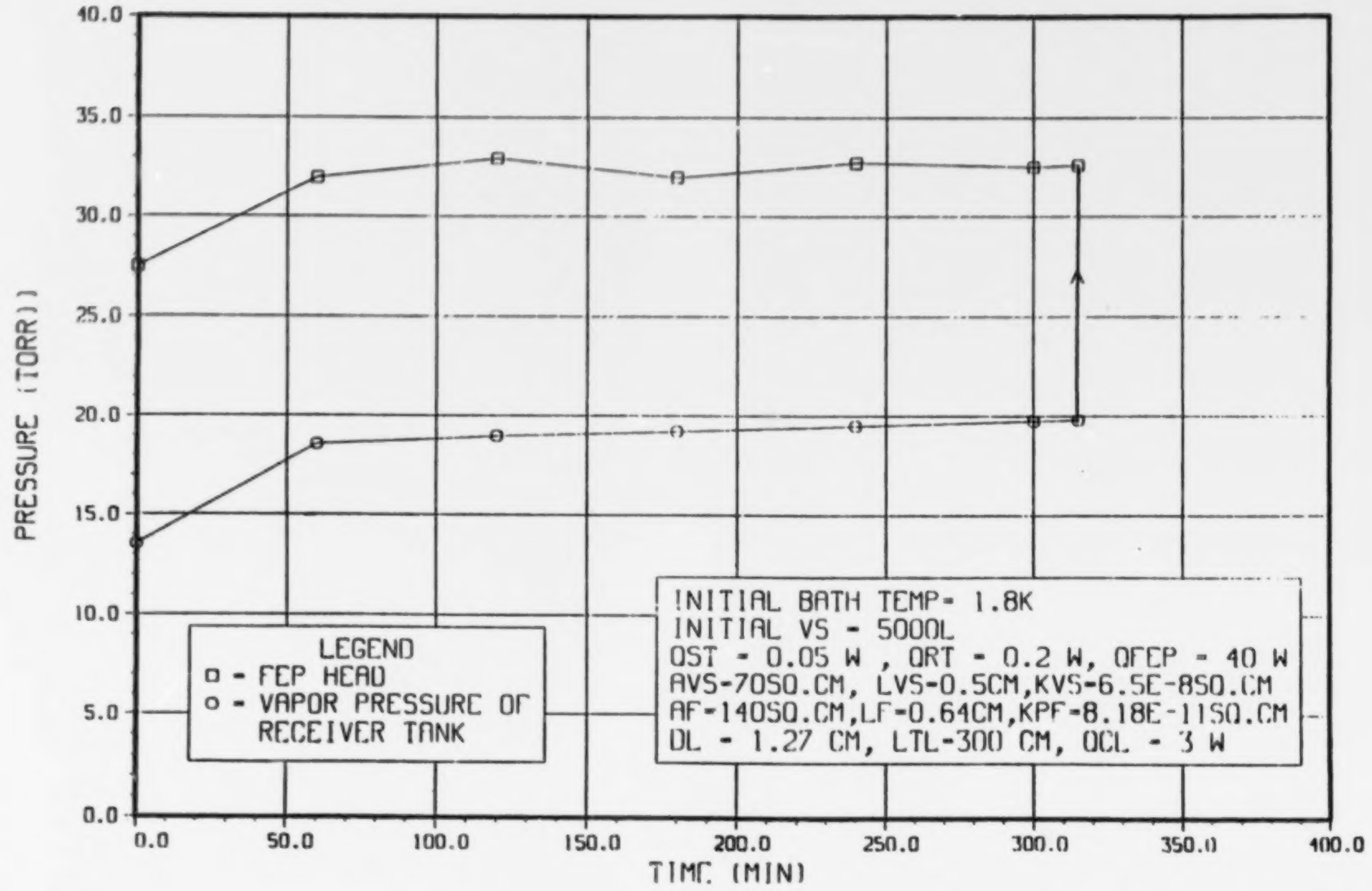

- THIS SUMMARIZES THE "DELIVERY EFFICIENCY" FOR ONE CASE INDICATING THE LOSSES CONSIDERED, AND THEIR MAGNITUDE.
- THIS CASE ASSUMES THE SFHT HE-II IS LAUNCHED AT 1.8 K AND THE FINAL REQUIRED RECEIVER TANK TEMPERATURE IS 1.8 K.
- THE LOSSES INCLUDE ORBITAL STORAGE LOSSES OF 100 L.
- THESE LOSSES CAN BE GREATLY REDUCED BY LAUNCHING THE SFHT AT 1.4 K VS 1.8 K.
- LAUNCHING 1.4 K FLUID IN THE SFHT IS BELIEVED TO BE STRAIGHTFORWARD BECAUSE OF THE NBP GUARD TANK.

SFHT TRANSFER EFFICIENCY (5000 L TRANSFER)

INITIAL HELIUM VOLUME AT LAUNCH	5000 L (1.8 K)
ORBITAL STORAGE LOSS (2 WEEKS AT 4%/MO.)	100 L
PLUMBING COOL-DOWN PRIOR TO TRANSFER (15 LBS OF SS., MARGIN OF 2)	12 L
TANKER VENT LOSSES DURING TRANSFER	190 L
UNUSABLE TANKER RESIDUALS (6 ARM LMD) 3%	150 L
RECEIVER TANK LOSSES IN BLOWDOWN TO 1.8 K	107 L
TOTAL LOSSES	559 L

DELIVER EFFICIENCY $\frac{\text{LIQUID DELIVERED}}{\text{LIQUID LAUNCHED}} = \frac{4441}{5000} = 89\%$

SFHT THERMAL MODELING

THERMAL DESIGN GOALS

- ORBITAL BOILOFF OF $<$10 % IN 9 MONTHS (1.1 %/MONTH). TO MEET THIS WILL REQUIRE A LOW PARASITIC HEAT LEAK UTILIZING SOME OR ALL OF THE FOLLOWING:
  - ADVANCED THERMAL ISOLATION TECHNIQUES
  - COOLED VACUUM SHELL
  - MECHANICAL REFRIGERATORS
- GROUND HOLD OF 17 DAYS USING He-I GUARD TANK. EXTENDING THE HOLD TIME PAST 17 DAYS WILL REQUIRE A NORMAL HELIUM TOP-OFF BUT NO SERVICING OF THE He-II TANK.

SFHT

SFHT THERMAL MODELING

THERMAL MATH MODEL DESCRIPTION

- TWO STEADY STATE THERMAL MATH MODELS OF THE TANKER HAVE BEEN DEVELOPED
  1) TANKER WITH 2 VAPOR COOLED SHIELDS (VCS)
  2) TANKER WITH 3 VAPOR COOLED SHIELDS

- MODEL COMPLEXITY
  - 36 NODES
  - 65 TEMPERATURE DEPENDENT CONDUCTION RESISTORS
  - INCLUDES VAPOR COOLING WITH AN ASSUMED EFFECTIVENESS OF 1.0
  - INCLUDES HEAT LEAK DUE TO PODS, MLI, PLUMBING AND INSTRUMENTATION

- MECHANICAL REFRIGERATORS
  - ATTACHED AT OUTER VAPOR COOLED SHIELD
  - USED PERFORMANCE CURVE FOR BRITISH AEROSPACE REFRIGERATOR

SFHT

SFHT THERMAL MODELING

THERMAL NETWORK SCHEMATIC

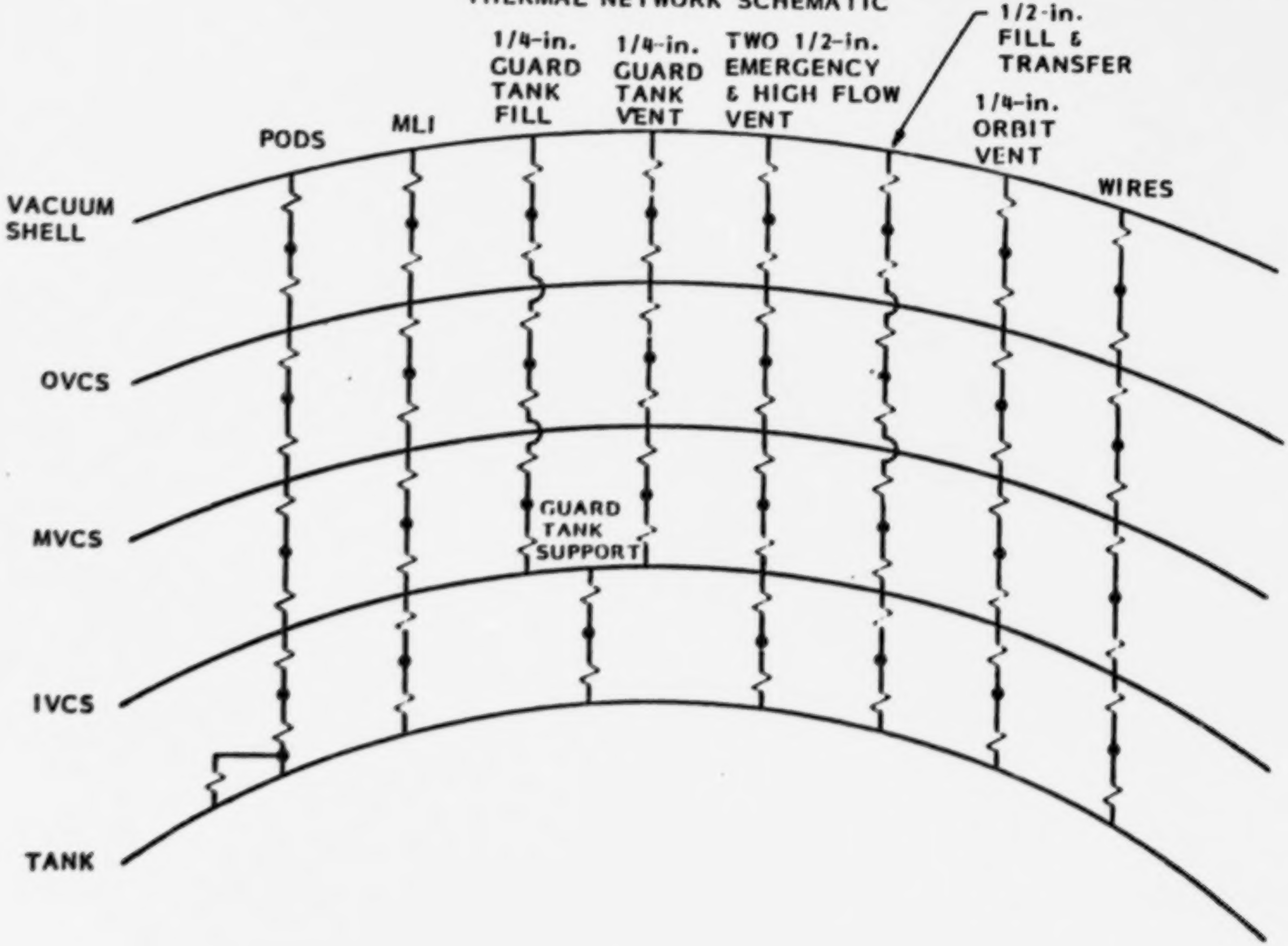

ONE OF THE TECHNIQUES FOR DECREASING THE BOILOFF IS TO ATTACH A MECHANICAL REFRIGERATOR TO THE OVCS. THIS IS THE PERFORMANCE CURVE FOR SINGLE BRITISH AEROSPACE COOLER THAT WAS USED TO DETERMINE THE IMPACT OF COOLING THE OVCS ON BOILOFF.

MECHANICAL REFRIGERATOR PERFORMANCE

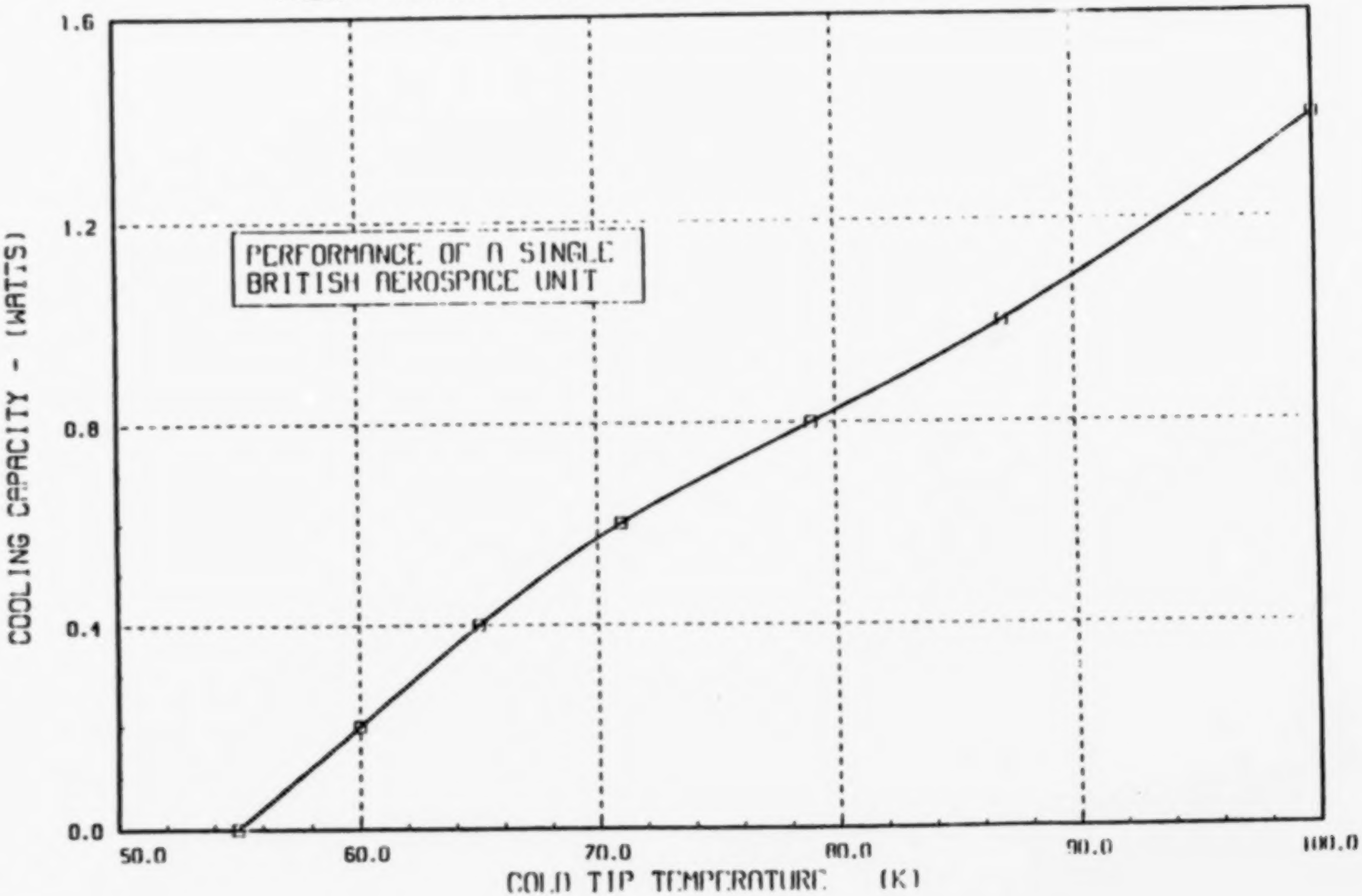

THE TABLE SHOWN ON THE NEXT TWO PAGES CONTAINS THE NOMINAL CONDITIONS THAT WERE ASSUMED IN THE THERMAL MODEL. IT INCLUDES THE ASSUMED TEMPERATURE BOUNDARIES, VOLUMES, MLI DEGRADATION FACTOR, SUPPORT CONDUCTANCE, NUMBER AND SIZE OF WIRES, NUMBER AND SIZE OF PLUMBING LINES.

SFHT THERMAL MODELING

NOMINAL CONDITIONS

TEMPERATURES (K)	
VACUUM SHELL	300
He-II TANK	1.8
GUARD TANK	4.2
VOLUMES (LITERS)	
He-II TANK	5250
He-II	5000
GUARD TANK	158
He-I	150
MLI DEGRADATION FACTOR	1.6
SUPPORT THERMAL CONDUCTANCE (W/K)	
PODS - LAUNCH	0.0040
PODS - ORBITAL	0.00034
GUARD TANK	0.0039

NOMINAL CONDITIONS
(CONTINUED)

MANGANIN WIRES	
0.020" DIAMETER	128
0.005" DIAMETER	200
STAINLESS STEEL VENT LINES (THERMALLY GROUNDED AT ALL 3 VCS'S)	
He-II TANK	2 - 1/2" WITH 0.02" WALL
GUARD TANK	1 - 1/4" WITH 0.02" WALL 1 - 1/4" WITH 0.02" WALL
STAINLESS STEEL FILL LINES (THERMALLY GROUNDED AT INNER VAPOR COOLED SHIELD ONLY)	
He-II TANK	1 - 1/2" WITH 0.02" WALL
GUARD TANK	1 - 1/4" WITH 0.02" WALL

THIS SHOWS THE HEAT FLOW AND TEMPERATURES FOR THE 2 VCS SYSTEM DURING ORBITAL OPERATION. THE 240 mW HEAT RATE TO THE HE-II TANK RESULTS IN A BOILOFF OF 3.9%/MONTH.

HEAT MAP FOR 2-VCS SYSTEM DURING ORBITAL OPERATION

(ALL HEAT FLOWS IN mW)

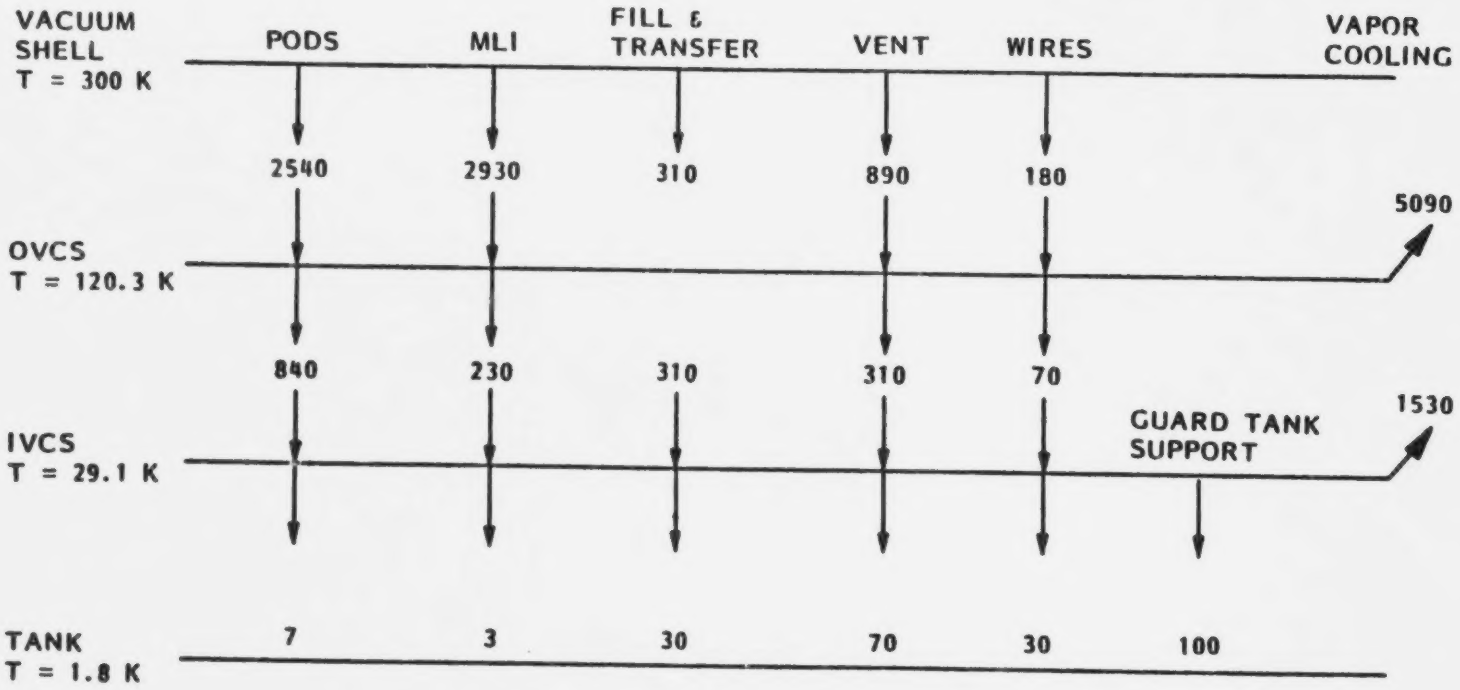

$Q_{He-II} = 240$

THE HEAT MAP FOR THE 3 VCS SYSTEM DURING ORBITAL OPERATION SHOWS A TOTAL HEAT LEAK OF 167 mW TO THE He-II, WHICH IS A 2.68%/MONTH BOILOFF.

SFHT THERMAL MODELING

HEAT MAP FOR 3-VCS SYSTEM DURING ORBITAL OPERATION
(ALL HEAT FLOWS IN MW)

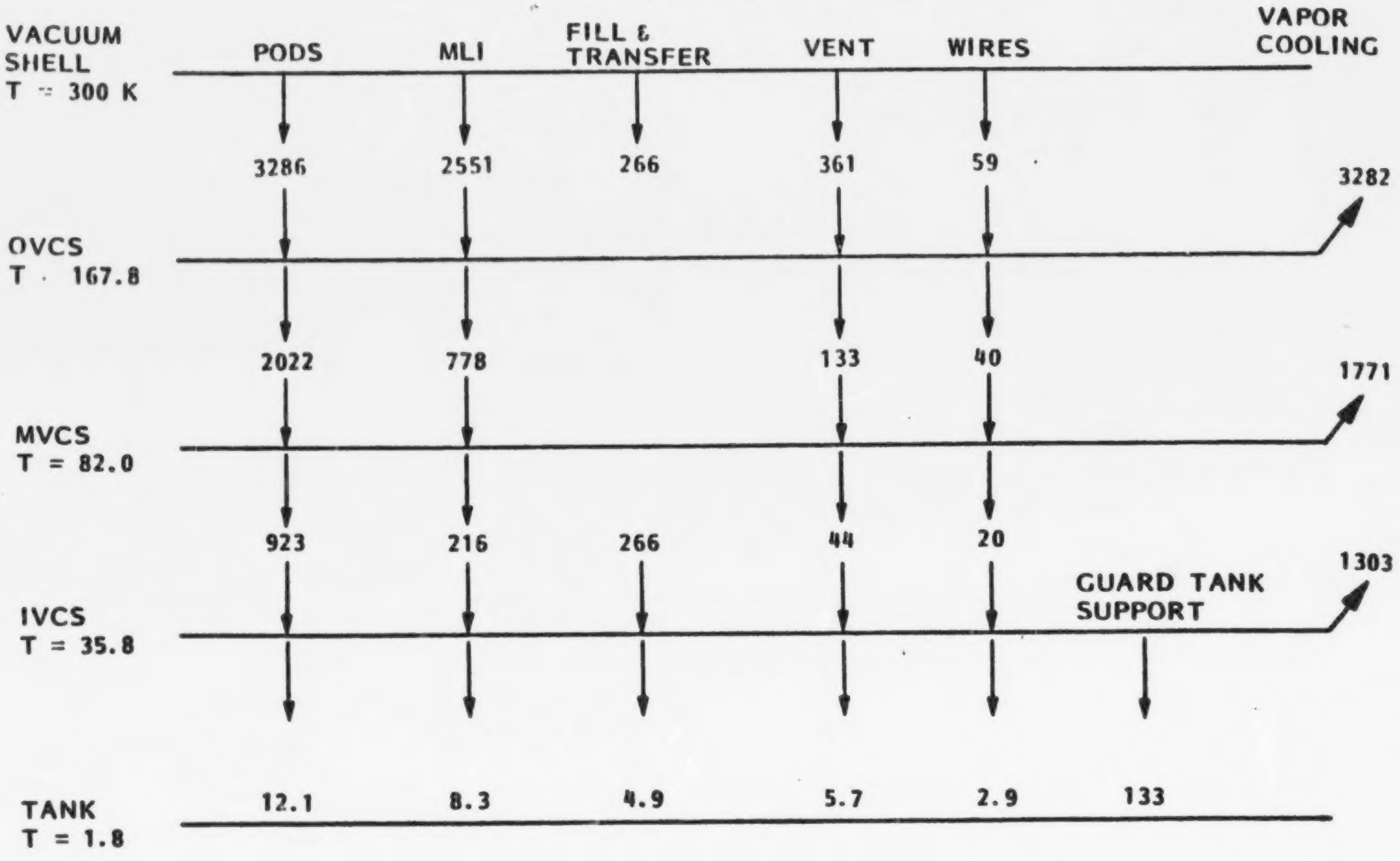

Q_{TOTAL} = 167 mW

THE HEAT MAP FOR THE 2 VCS SYSTEM DURING GROUND HOLD SHOWS A HEAT LEAK OF 707 mW AND 8.7 mW TO THE GUARD TANK AND HE-II TANK, RESPECTIVELY. THE 707 mW TO THE GUARD TANK MEANS THAT A 150 L TANK WOULD BE DEPLETED IN 7.3 DAYS. THE 8.7 mW TO THE HE-II TANK WOULD RESULT IN A WARMING OF THE HE-II AT A RATE OF 0.0009 K/MONTH.

SFHT THERMAL MODELING

HEAT MAP FOR 2 VCS SYSTEM DURING GROUND HOLD
(ALL HEAT FLOWS IN mW)

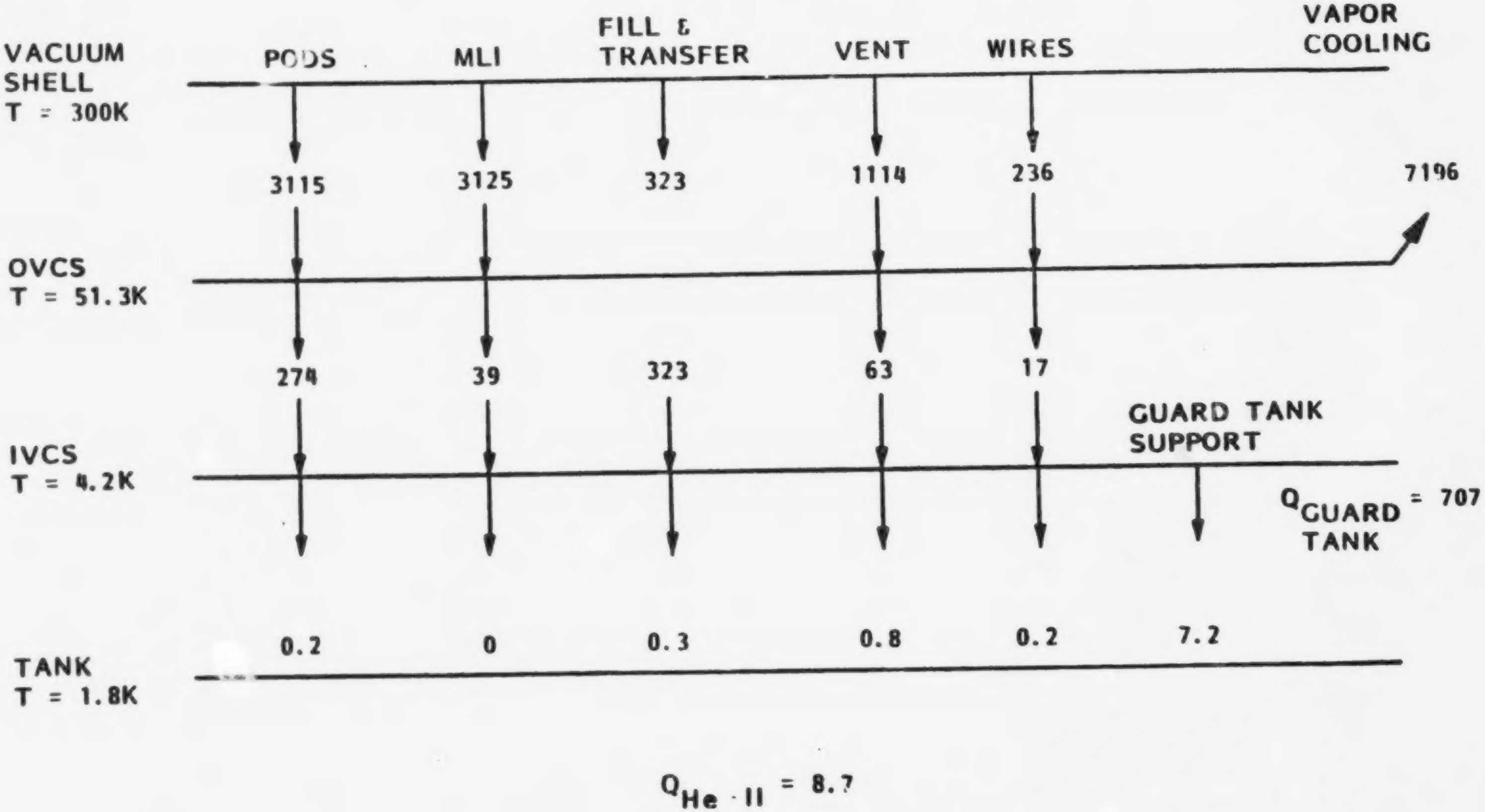

THE HEAT MAP FOR THE 3 VCS SYSTEM DURING GROUND HOLD SHOWS A HEAT LEAK OF 432 mW AND 2.1 mW TO THE GUARD TANK AND HE-II TANK, RESPECTIVELY. THE 432 mW TO THE GUARD TANK MEANS THAT A 150 L TANK WOULD BE DEPLETED IN 12 DAYS. THE 2.1 mW TO THE HE-II TANK WOULD RESULT IN A WARMING OF THE HE-II AT A RATE OF 0.0002 K/MONTH. THE EFFECTIVENESS OF THE GUARD TANK IN EXTENDING THE HOLD TIME OF THE HE-II IS DEMONSTRATED BY COMPARING THE 2.1 mW HEAT LOAD WITH A GUARD TANK TO THE 3800 mW HEAT LOAD WITHOUT A GUARD TANK.

SFHT THERMAL MODELING

HEAT MAP FOR 3-VCS SYSTEM DURING GROUND HOLD
(ALL HEAT FLOWS IN mW)

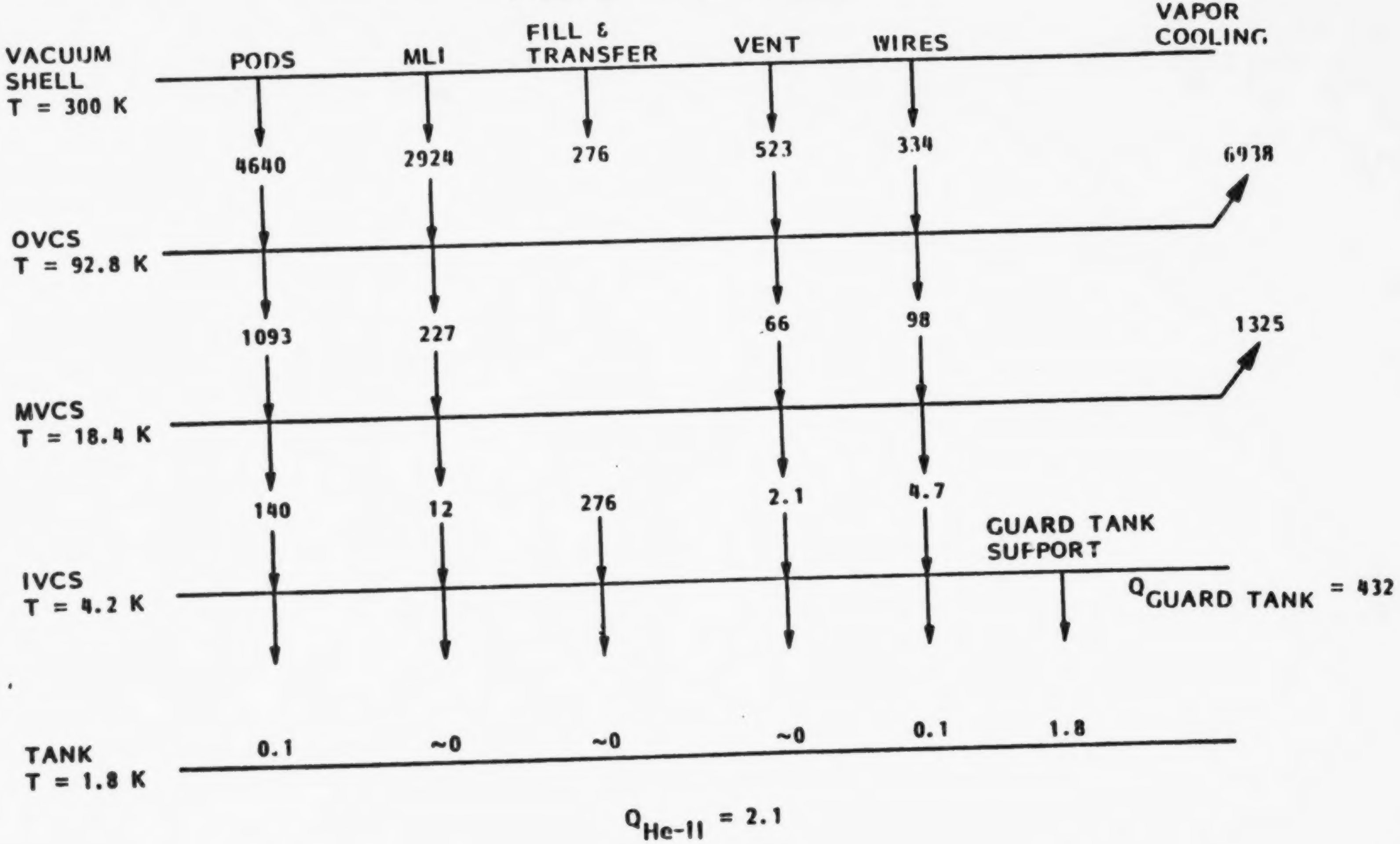

THIS SHOWS THAT AT THE NOMINAL SHELL TEMPERATURE OF 300K, THE 3 VCS SYSTEM HAS A BOILOFF 45% LOWER THAN THE 2 VCS SYSTEM. ALSO, LOWERING THE SHELL TEMPERATURE FROM 300K TO 200K WOULD REDUCE THE BOILOFF OF THE 3 VCS SYSTEM BY 37% TO 1.7%/MONTH.

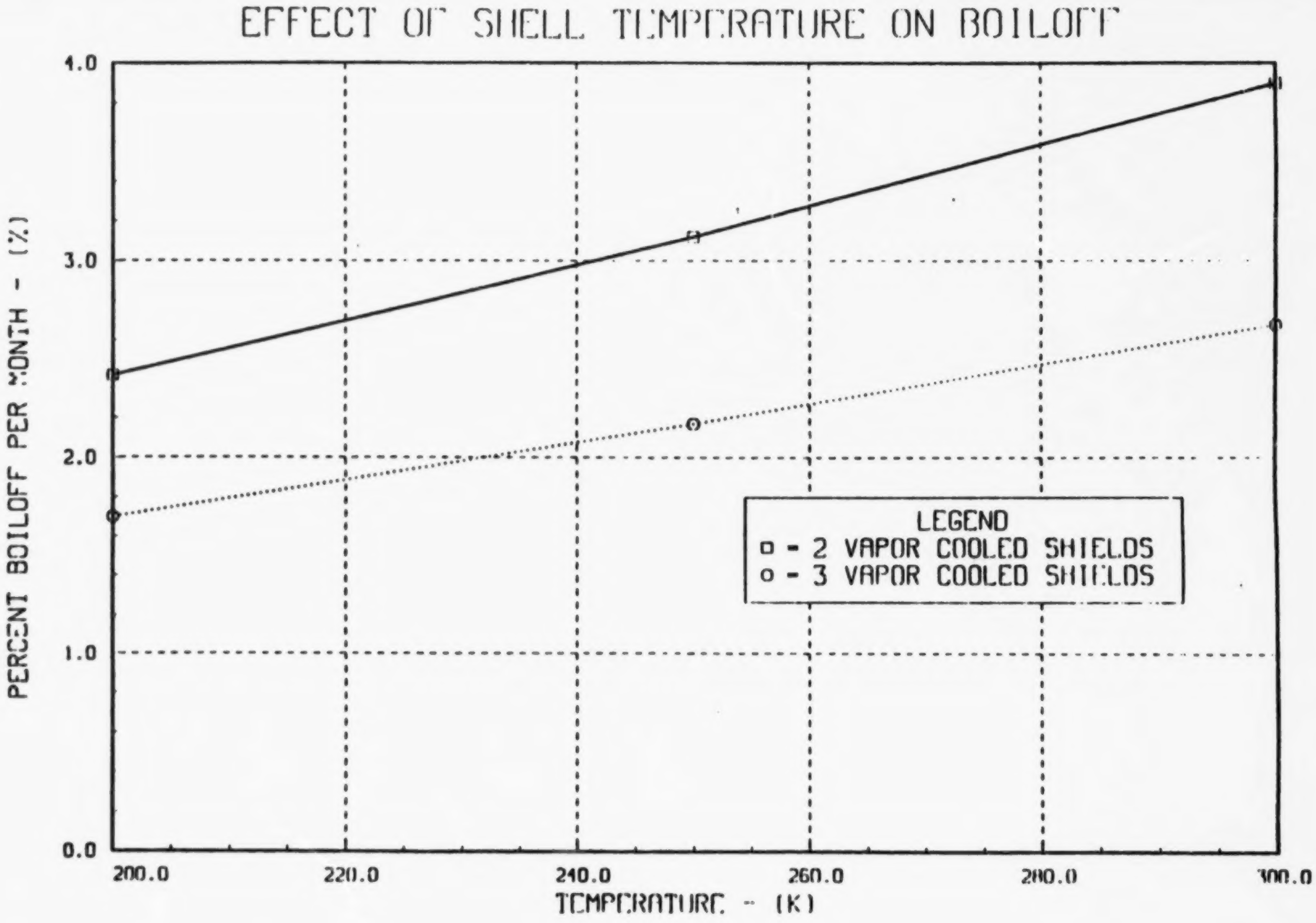
EFFECT OF SHELL TEMPERATURE ON BOILOFF
PERCENT BOILOFF PER MONTH - (%)
0.0
1.0
2.0
3.0
4.0
200.0
220.0
240.0
260.0
280.0
300.0
TEMPERATURE - (K)
LEGEND
□ - 2 VAPOR COOLED SHIELDS
○ - 3 VAPOR COOLED SHIELDS

THE MLI DEGRADATION FACTOR IS DEFINED AS THE RATIO OF THE HEAT FLUX THROUGH A BLANKET COMPARED TO THE HEAT FLUX THROUGH THE BLANKET IF IT WERE ON A FLAT PLATE. THE NOMINAL VALUE OF 1.6 IS A CONSERVATIVE ESTIMATE BASED ON PREVIOUS TEST RESULTS AND THE LIMITS OF 1.0 TO 3.0 COVER THE POTENTIAL RANGE OF MLI PERFORMANCE. A DEGRADATION FACTOR OF 3.0 RESULTS IN A 22% INCREASE IN BOILOFF OVER THE NOMINAL VALUE WHILE A DEGRADATION FACTOR OF 1.0 YIELDS AN 11% DECREASE IN THE BOILOFF.

EFFECT OF MLI DEGRADATION FACTOR ON BOILOFF

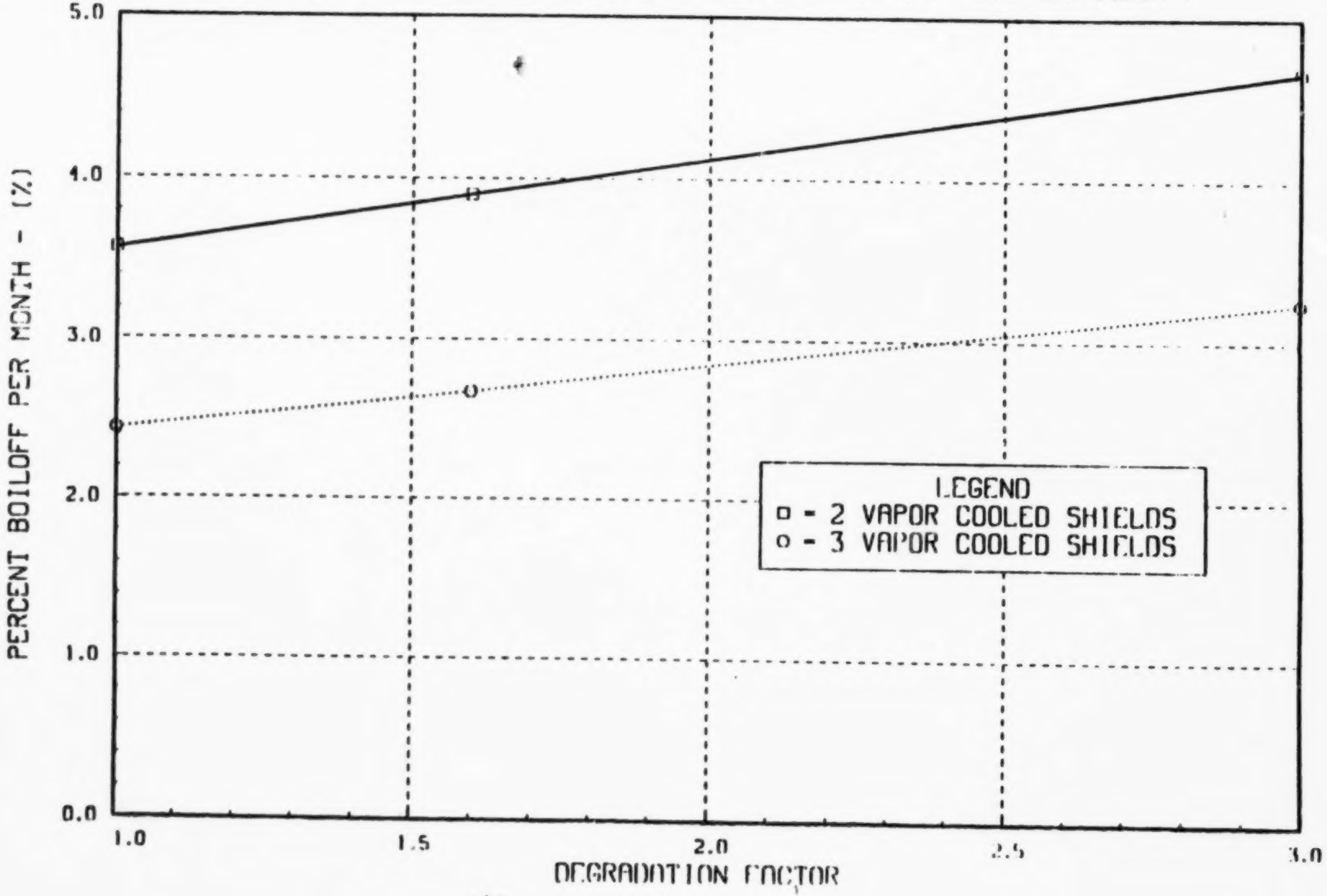

THE PODS ORBITAL THERMAL CONDUCTANCE HAS A LARGE INFLUENCE ON THE ORBITAL BOILOFF. A VARIATION OF THE CONDUCTANCE FOR THE 3 VCS SYSTEM OF +100% AND -100% RESULTS IN THE BOILOFF INCREASING 33% AND DECREASING 52%, RESPECTIVELY.

SFHT THERMAL MODELING

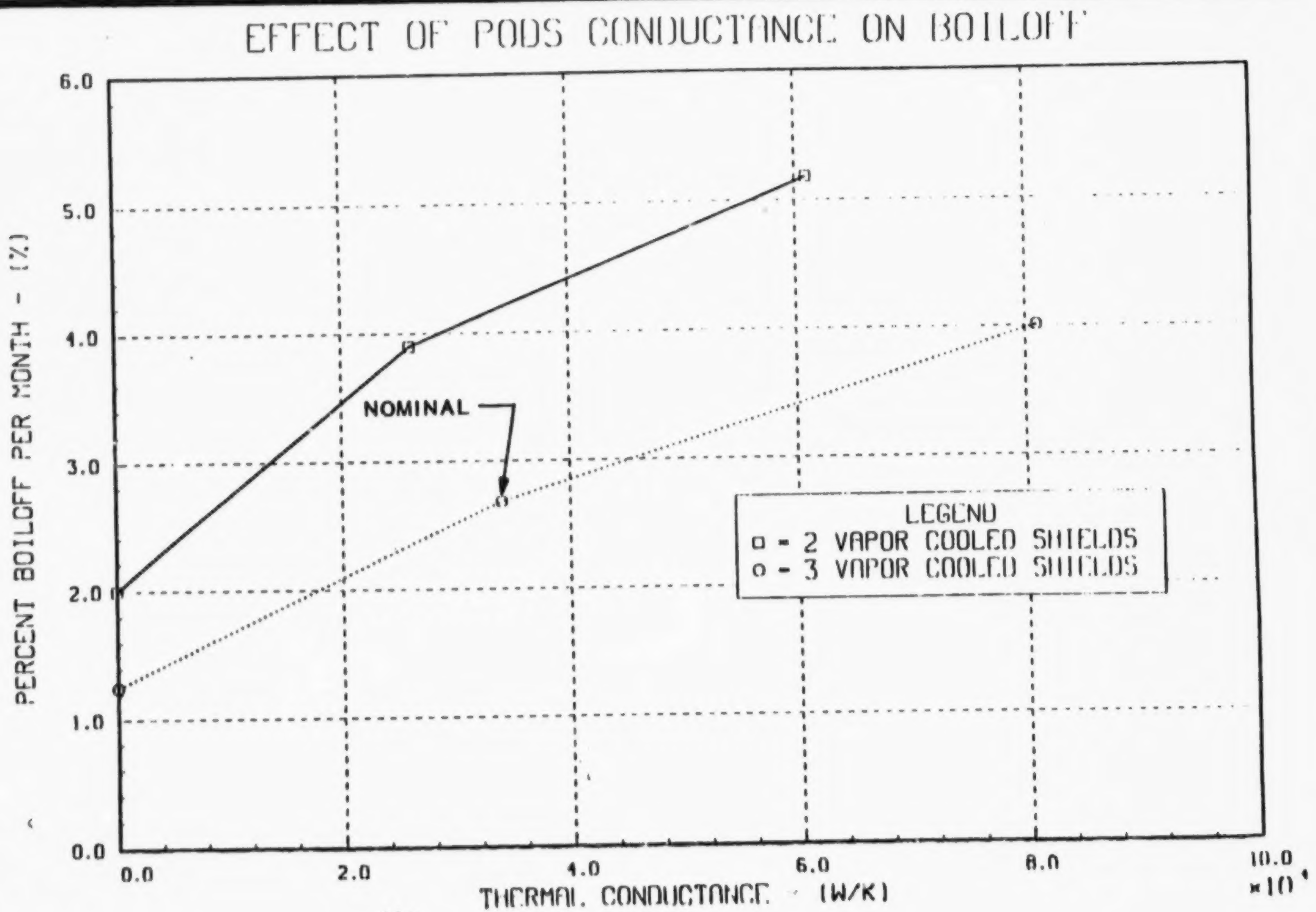

THE GUARD TANK IS SUPPORTED OFF OF THE HE-II TANK BY FIBERGLASS TUBES, WHICH IMPOSES A MODERATE HEAT LEAK TO THE HE-II WHEN THE GUARD WARMS UP TO THE IVCS TEMPERATURE. THIS FIGURE SHOWS THAT REMOVING THIS SUPPORT TUBE REDUCES THE BOILOFF FROM 2.7%/MONTH TO 2.2%/MONTH FOR THE 3 VCS SYSTEM.

SFHT THERMAL MODELING

EFFECT OF GUARD TANK SUPPORT CONDUCTANCE ON BOILOFF

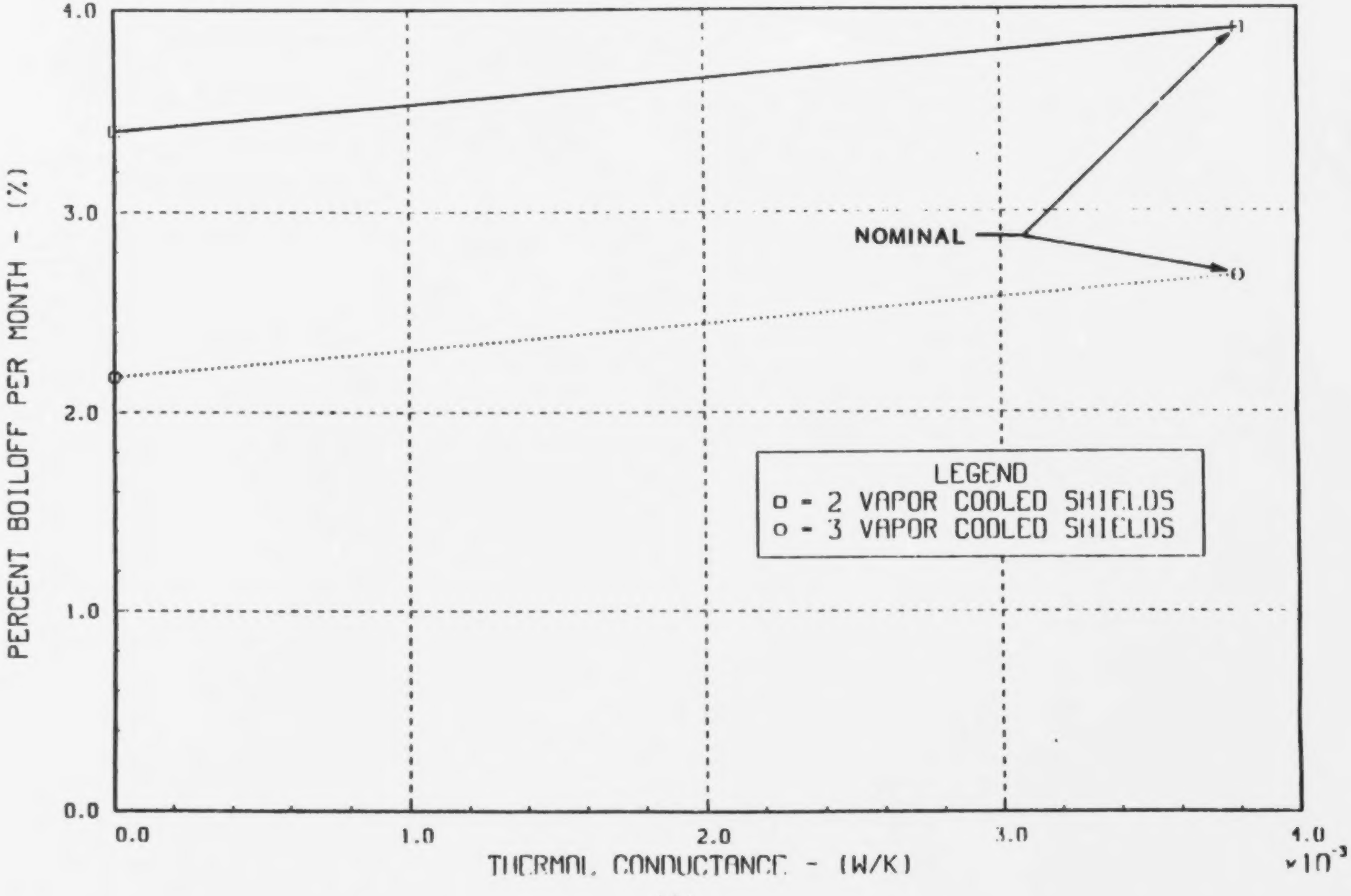

THE BOILOFF CAN BE REDUCED BY ATTACHING MECHANICAL REFRIGERATORS TO THE OVCS WHICH LOWERS THE BOUNDARY TEMPERATURE AND REDUCES THE PARASITIC HEAT LOAD TO THE HE-II. THIS FIGURE SHOWS THE EFFECT OF USING A NUMBER OF BRITISH AEROSPACE MECHANICAL REFRIGERATORS ON THE 2 VCS SYSTEM FOR 3 DIFFERENT SHELL TEMPERATURES.

REFRIGERATORS WHICH WOULD OPERATE AT LOWER TEMPERATURES WOULD OFFER MUCH GREATER BENEFIT BUT NEED DEVELOPMENT.

SFHT

SFHT THERMAL MODELING

EFFECT OF MECHANICAL REFRIGERATORS ON BOILOFF

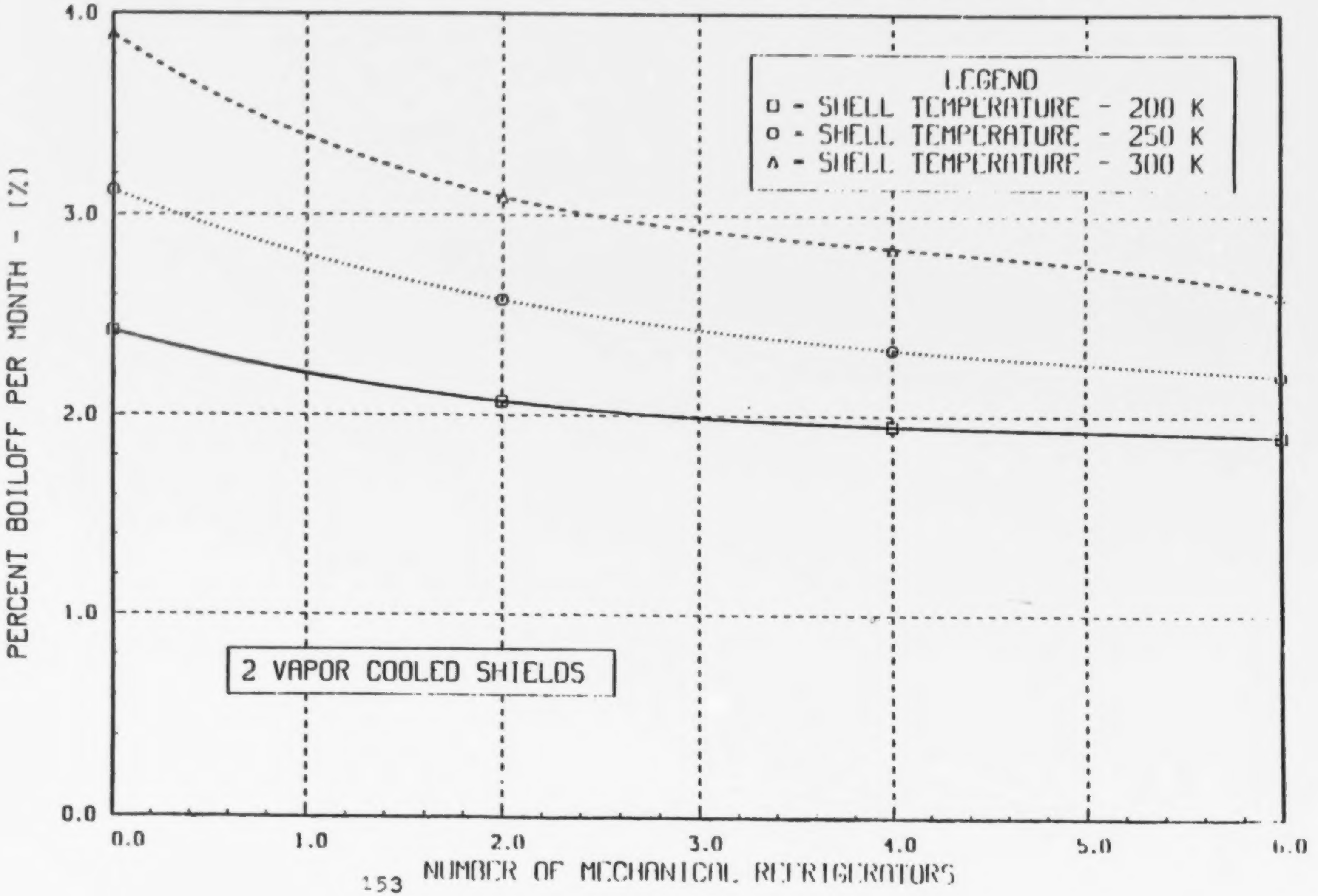

THIS FIGURE SHOWS THE REDUCTION IN BOILOFF FOR THE 3 VCS SYSTEM AS A FUNCTION OF THE NUMBER OF MECHANICAL REFRIGERATORS FOR THREE DIFFERENT SHELL TEMPERATURES.

EFFECT OF MECHANICAL REFRIGERATORS ON BOILOFF

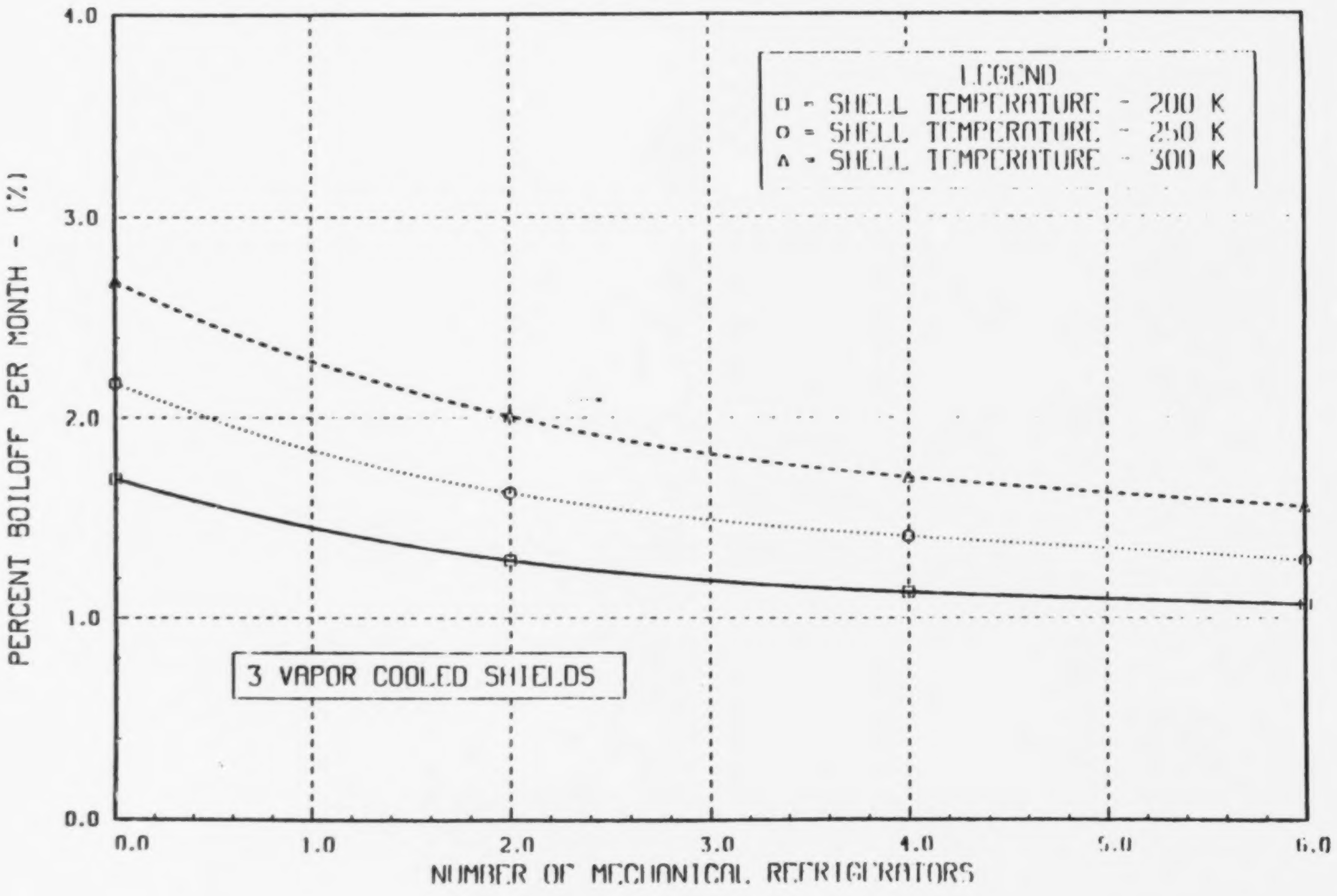

THE TANKER CAN OPERATE FOR A PERIOD OF TIME IN A NON-VENTED CONDITION, DEPENDING ON THE FRACTION OF LIQUID IN THE TANK. THIS FIGURE SHOWS THE TIME REQUIRED TO REACH A GIVEN FINAL TEMPERATURE FROM A STARTING TEMPERATURE OF 1.8K AS A FUNCTION OF THE LIQUID FRACTION. THE MAXIMUM TIME WITHOUT VENTING (105 HR) OCCURS WHEN THE TANKER IS FULL AND THE TEMPERATURE IS ALLOWED TO INCREASE TO THE LAMBDA TEMPERATURE. THIS IS A CONSERVATIVE ESTIMATE SINCE IT IS BASED ON A STEADY STATE ANALYSIS AND DOES NOT ACCOUNT FOR THE TIME REQUIRED TO REACH A NEW STEADY STATE WITHOUT VAPOR COOLING.

THIS MAY BE OF INTEREST TO DETERMINE THE LENGTH OF TIME THE SFHT CAN BE "HANDLED" BY EVA ACTIVITIES WITHOUT VENTING.

SFHT THERMAL MODELING

NON-VENTED ORBITAL PERIODS

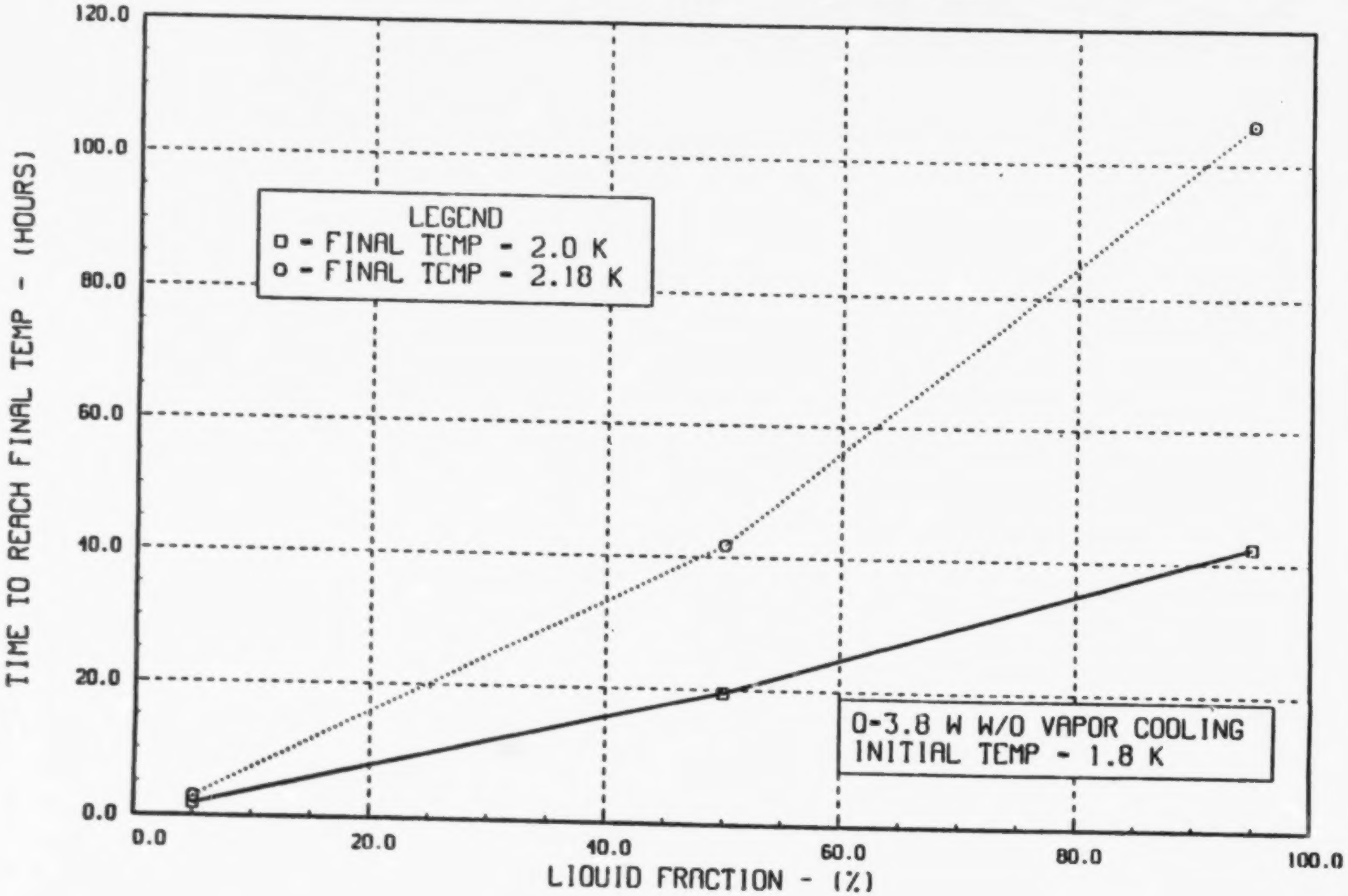

THE GROUND HOLD IS SUMMARIZED FOR BOTH THE 2 AND 3 VCS SYSTEMS.

THE FIRST CONDITION SHOWS THE HOLD TIME WITHOUT SERVICING FOR A 150 L GUARD TANK. THIS GROUND HOLD CAN BE INCREASED TO THE DESIRED 17 DAYS BY INCREASING THE VOLUME OF THE GUARD TANK.

THE SECOND CONDITION DESCRIBES THE RATE OF THE HE-II WARMUP WHEN IT HAS A 4.2K GUARD. THE WARMUP IS SO SLOW THAT THE HE-II CAN ESSENTIALLY BE STORED INDEFINITELY WITHOUT SERVICING. EXTENDING THE GROUND HOLD BEYOND THE REQUIRED 17 DAYS DOES NOT REQUIRE ANY SERVICING OF THE HE-II BUT ONLY A TOP OFF OF THE GUARD TANK WITH NORMAL HELIUM.

THE THIRD CONDITION SHOWS THE TIME TO WARM FROM 1.8K TO THE LAMBDA TMPERATURE WITHOUT A GUARD TANK AND THEREFORE NO VAPOR COOLING. ALLOWING THE HE-II TO WARM TO THE LAMBDA TEMPERATURE AT LAUNCH WOULD RESULT IN A 10% LOSS OF HE-II TO BLOWDOWN TO 1.8K.

SHFT THERMAL MODELING

GROUND HOLD SUMMARY

CONDITION	2 VCS SYSTEM	3 VCS SYSTEM
HOLD TIME WITH 150 L OF He-I (DAYS)	7.3	12.0
He-II WARMUP RATE WITH 4.2 K GUARD (K/MONTH)	0.0009	0.0002
TIME FOR He-II TO WARM FROM 1.8 K TO 2.18 K (DAYS)	4.5	4.5

THE SUMMARY OF TANK HEAT FLUX DATA SHOWS THE TEST RESULTS FOR A VARIETY OF LOSS OF VACUUM EXPERIMENTS.

THE FOAM EFFECTIVENESS GRAPH SHOWS THE PREDICTED TANK HEAT FLUX VERSUS FOAM INSULATION THICKNESS ASSUMING A NITROGEN CONDENSATION TEMPERATURE AT THE SURFACE OF THE FOAM. THIS SHOWS THE POTENTIAL FOR REDUCING THE TANK HEAT RATE BY A FACTOR OF 40 BY USING 1/4-IN. OF FOAM ON THE TANK. THIS REDUCED HEAT RATE (APPROXIMATELY 0.0125 W/CM^2) IS USED FOR THE EMERGENCY VENT FLOW CALCULATIONS.

THE HEAT RATE REDUCTION ASSOCIATED WITH THIS FOAM REQUIRES EXPERIMENTAL CONFIRMATION.

SFHT THERMAL MODELING

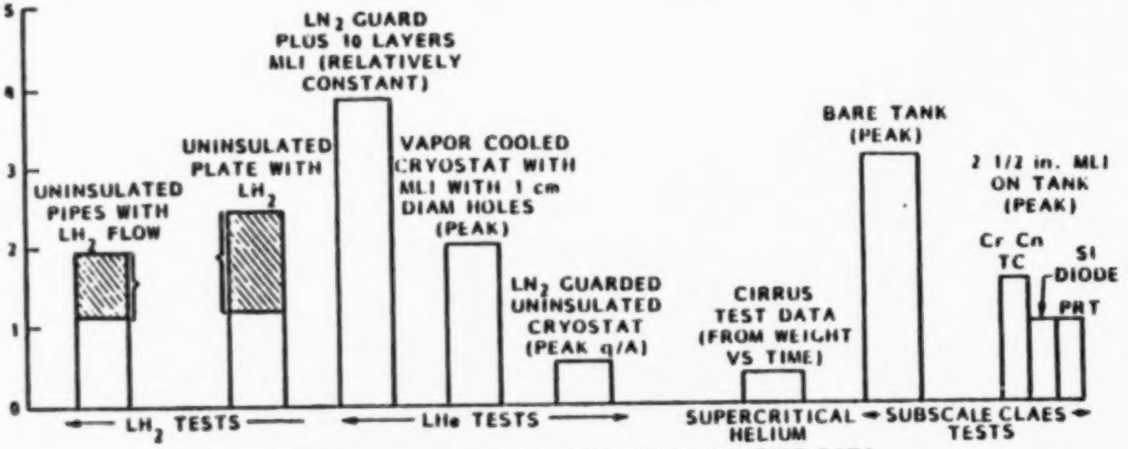

SUMMARY OF TANK HEAT FLUX AVAILABLE TEST DATA

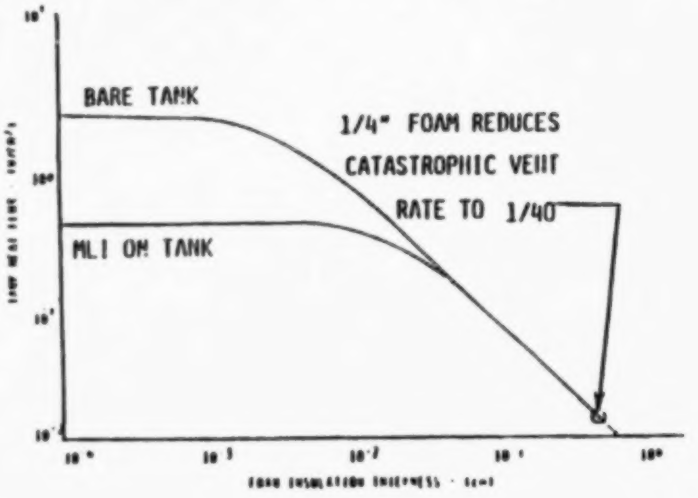

SUMMARY

- ORBITAL BOILOFF OF 1.1 %/MONTH IS EQUIVALENT TO A 7 YEAR DEWAR. MEETING THIS GOAL WILL REQUIRE A WELL ISOLATED SYSTEM AS WELL AS LOW BOUNDARY TEMPERATURES. THE MOST EFFECTIVE APPROACHES TO MEETING THIS GOAL APPEAR TO BE:
  - USING STATE-OF-THE-ART PODS TO REDUCE THE SUPPORT CONDUCTANCE
  - VACUUM SHELL COOLED TO 200 K OR LESS
- A MECHANICAL REFRIGERATOR WITH A ZERO POINT TEMPERATURE LOWER THAN THAT OF THE BRITISH AEROSPACE REFRIGERATOR MAY BE MORE EFFECTIVE AT REDUCING BOILOFF.
- THE CURRENT GROUND HOLD OF 12 DAYS CAN EASILY BE INCREASED TO 17 DAYS BY INCREASING THE GUARD TANK VOLUME.
- THE TANKER CAN BE IN A NON-VENTED CONDITION FOR UP TO 100 HOURS WITHOUT EXCEEDING THE LAMBDA POINT, DEPENDING ON THE AMOUNT OF He-II IN THE TANK.
- CLOSED CELL FOAM CAN POTENTIALLY REDUCE THE TANK HEAT RATES DURING A LOSS OF VACUUM INCIDENT BY A FACTOR OF 40, THEREBY GREATLY REDUCING THE EMERGENCY VENT FLOW RATES.

PLUMBING AND OPERATIONS

THE SFHT SYSTEM PRESENTED IN THIS SECTION HAS SEVERAL INTERESTING FEATURES. THE HE-II SYSTEM HAS A STORAGE TANK VOLUME OF 5250 L, WHICH INCLUDES ULLAGE. A HE-I SYSTEM IS USED AS A GUARD SYSTEM AND IS ATTACHED TO THE INNER VAPOR-COOLED SHIELD. THE TANK VOLUME FOR THE GUARD SYSTEM IS 158 L, WHICH ALSO INCLUDES ULLAGE. FOR EASE OF OPERATIONS, THE TWO VENT SYSTEMS ARE COMPLETELY SEPARATE.

BASED UPON THE INITIAL STATEMENT OF WORK, THE FOLLOWING REQUIREMENTS WERE IDENTIFIED FOR THIS SECTION. THE SYSTEM IS REUIRED TO BE TWO-FAULT TOLERANT FOR SAFETY AND SINGLE-FAULT TOLERANT FOR MISSION SUCCESS. IT IS ALSO NOTED THAT FAILURE OF THE VACUUM SHELL IS CREDIBLE, AND MUST BE INCLUDED IN THE SYSTEM REVIEW AS A MODE OF FAILURE.

IN ADDITION TO THESE REQUIREMENTS, ASSUMPTIONS WERE MADE AS TO VENT PATHS FOR THE TWO HELIUM SYSTEMS. THE GUARD SYSTEM WOULD BE ALLOWED TO VENT INTO THE PAYLOAD BAY, BOTH FOR NORMAL AND EMERGENCY OPERATIONS. THE HE-II SYSTEM WOULD BE CONNECTED TO A SHUTTLE-SUPPLIED 2-IN. DIAMETER EMERGENCY BAY VENT SYSTEM. THIS LINE IS A SCHEDULED MODIFICATION TO THE ORBITERS, HOWEVER, IT HAS NOT YET BEEN IMPLEMENTED. IT IS SUGGESTED THAT THIS BE AN INSULATED LINE.

COMPONENTS USED IN THE DESIGN OF THE FLUID SUBSYSTEM HAVE EITHER BEEN DEVELOPED BY OTHER FLIGHT PROGRAMS OR ARE UNDER DEVELOPMENT FROM THE SHOOT PROGRAM. NO NEW COMPONENTS ARE ENVISIONED WHICH WOULD REQUIRE CONCEPTUAL DEVELOPMENT, WITH THE PRESENT BASELINED DESIGN. QUANTITIES OF EACH OF THESE COMPONENTS ARE SHOWN IN PARENTHESES NEXT TO THE COMPONENT TYPE.

PLUMBING AND OPERATIONS

MAJOR COMPONENTS OF BOTH SYSTEMS

************************ COMPONENTS ************************
FROM SHOOT

- COLD MOTOR-DRIVEN VALVES (12)
- "COLD" PRESSURE RELIEF VALVES (4)
- FLOW METER (1)
- WARM MOTOR-DRIVEN VALVES (4)
- FOUNTAIN EFFECT PUMP (1)
- MASS GAUGE (1)

************************ COMPONENTS ************************
FROM OTHER FLIGHT PROGRAMS

- BURST-DISC/CHECK VALVE ASSEMBLIES (WARM) (6)
- ABSOLUTE PRESSURE RELIEF VALVES (1)
- MANUALLY-OPERATED VALVES (WARM) (2)
- PYRO-VALVES (5)
- LIQUID-ACQUISITION DEVICE (1)

THE COMPLETE OPERATIONS SCENARIOS FOR THE SHFT HAVE YET TO BE DETERMINED. HOWEVER, AN ATTEMPT HAS BEEN MADE TO BUILD A STRAWMAN SCENARIO AND THEN A FIRST CUT AT POSSIBLE EMERGENCY OPERATIONS THAT MIGHT OCCUR AT ANY PARTICULAR STEP IN THIS STRAWMAN SCENARIO. IT SHOULD BE NOTED THAT THE SCENARIOS AND OPERATIONS SHOWN ARE ONLY ONE OF MANY COMBINATIONS WHICH ARE POSSIBLE. A MUCH MORE DETAILED OPERATIONS/SAFETY REVIEW WOULD BE NECESSARY TO SUPPORT PHASE B OF THIS PROGRAM.

SFHT

PLUMBING & OPERATIONS

POSSIBLE SFHT SCENARIOS/OPERATIONS

I. GROUND CHECK-OUTS (PRIOR TO FILL)

A. PRESSURE CHECKS
B. LEAK CHECKS
C. COMPONENT VERIFICATION
D. OTHERS AS REQUIRED

EMERGENCY OPS

1. NONE

II. GROUND FILL OPERATIONS

A. SYSTEM PURGES
B. COOLDOWN OF SYSTEM
C. NBP HE FILL
D. SFHE HE FILL
E. GUARD TANK FILL
F. TOP-OFF OF SFHE
G. TOP-OFF OF GUARD SYSTEM

EMERGENCY OPS

1. MINOR LEAK
2. MAJOR LEAK
3. LOSS OF VAC.
4. PLUGGED LINE
5. LOSS OF POWER
6. FAILED COMPON.
7. TANK RUPTURE

III. INTEGRATION WITH LAUNCH VEHICLE

A. VENT OF GUARD TANK DURING GROUND HOLD
B. VENT OF GUARD TANK DURING GROUND MOVES AND INTEGRATION
C. TOP-OFF OF GUARD TANK AS REQ.
D. CLOSE OFF OF GUARD TANK/SYSTEM TO SUPERCRITICAL HE

EMERGENCY OPS

1. MINOR LEAK
2. MAJOR LEAK
3. LOSS OF VAC.
4. PLUGGED LINE
5. LOSS OF POWER
6. FAILED COMPON.
7. TANK RUPTURE

IV. INSERTION OPERATIONS/SCENARIOS

A. LAUNCH
B. ABORT ON LAUNCH PAD
C. ABORT DURING LIFT-OFF
D. INSERTION INTO ORBIT

EMERGENCY OPS

1. MINOR LEAK
2. MAJOR LEAK
3. LOSS OF VAC.
4. PLUGGED LINE
5. LOSS OF POWER
6. FAILED COMPON.
7. TANK RUPTURE

ORIGINAL PAGE IS
OF POOR QUALITY

V. ON-ORBIT OPERATIONS

A. VENTING OF GUARD TANK RESIDUALS	EMERGENCY OPS
B. SYSTEM COUPLER MATING	1. MINOR LEAK
C. SFHT VENTING START	2. MAJOR LEAK
D. TRANSFER LINE COOLDOWN	3. LOSS OF VAC.
E. TRANSFER/FILL OPERATIONS(VENTED)	4. TANK RUPTURE
F. TRANSFER/FILL OPERATIONS(NON-V)	5. LOSS OF POWER
G. POST-TRANSFER OPERATIONS(VENTED)	6. ORBITAL ABORT
H. POST-TRANSFER OPERATIONS(NON-V)	7. FAILURE TO DISCONNECT
I. TRANSPORT OPERATIONS TO/FROM S.S.	8. FAILED COMPON.

VI. LANDING OPERATIONS

A. PRE-DECENT OPERATIONS	EMERGENCY OPS
B. VENTING DURING DECENT(GUARD)	1. MINOR LEAK
C. VENTING DURING DECENT(SFHE)	2. MAJOR LEAK
D. POST LANDING OPERATIONS	3. LOSS OF VAC.
	4. TANK RUPTURE
	5. LOSS OF POWER
	6. FAILED COMPON.
	7. PLUGGED LINE

VII. WARM-UP/MAINTENANCE OPERATIONS

EMERGENCY OPS
1. NONE

VIII. FERRY OPERATIONS

EMERGENCY OPS
1. NONE

THE SCHEMATIC SHOWN IS THE SHFT AND A POSSIBLE CANDIDATE RECEIVER, XRS. THE SYSTEMS ARE JOINED BY THE COUPLER BEING DEVELOPED BY SHOOT, THE TANKER POSSESSING BOTH THE TRANSFER LINE AND THE MALE HALF OF THE COUPLER. THE TANKER SUPPLIES THE VENT PATH FOR BOTH TANKER-BORNE HELIUM SYSTEMS AS WELL AS FOR ANY LEAK-BY FOR THE MATED COUPLER DURING OPERATIONS. THE RECEIVER IS ASSUMED TO SUPPLY ITS OWN VENT SYSTEM FOR FILL AND COOL-DOWN OPERATIONS.

SFHT

PLUMBING AND OPERATIONS

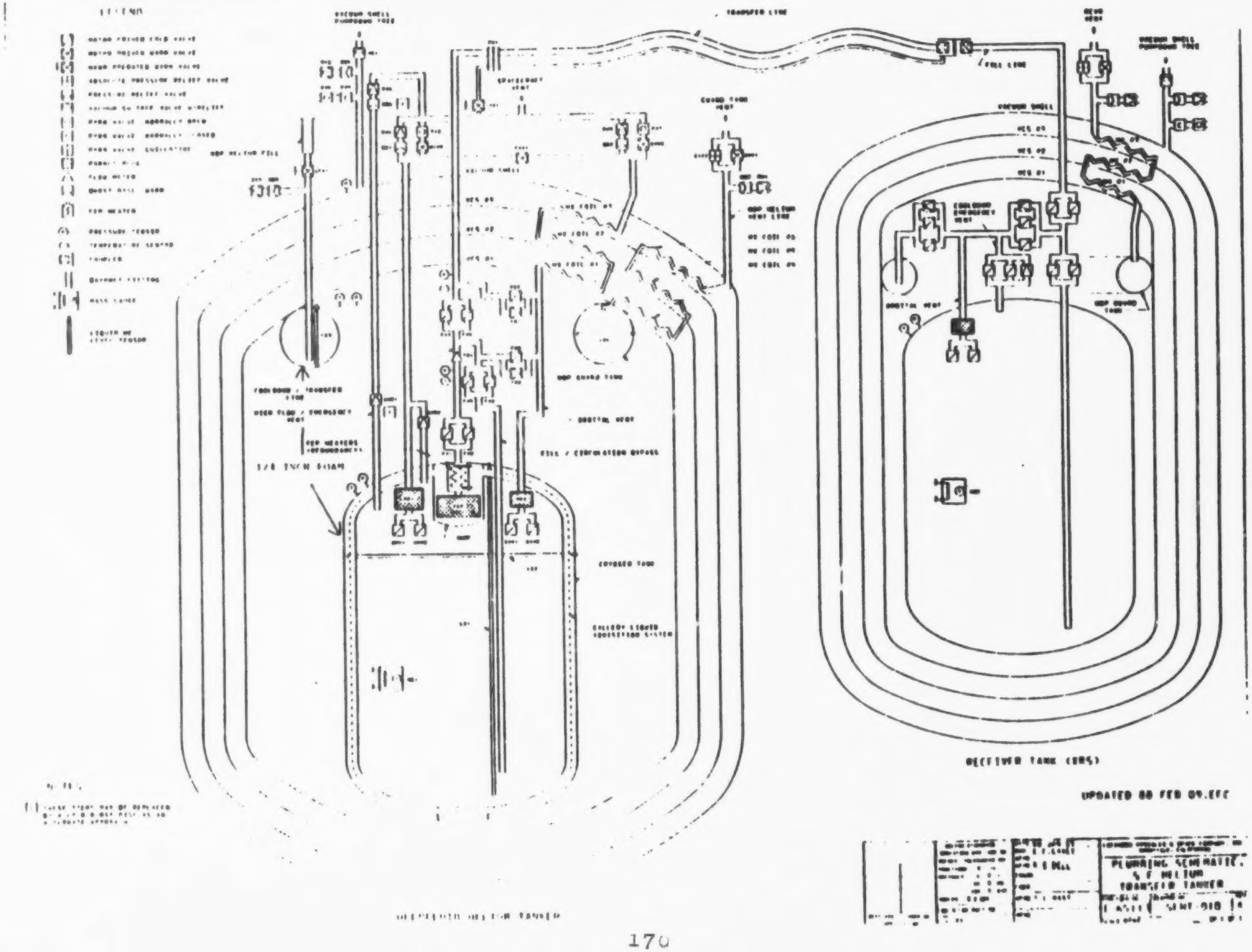

ORIGINAL PAGE IS
OF POOR QUALITY

SEQUENCE OF EVENTS

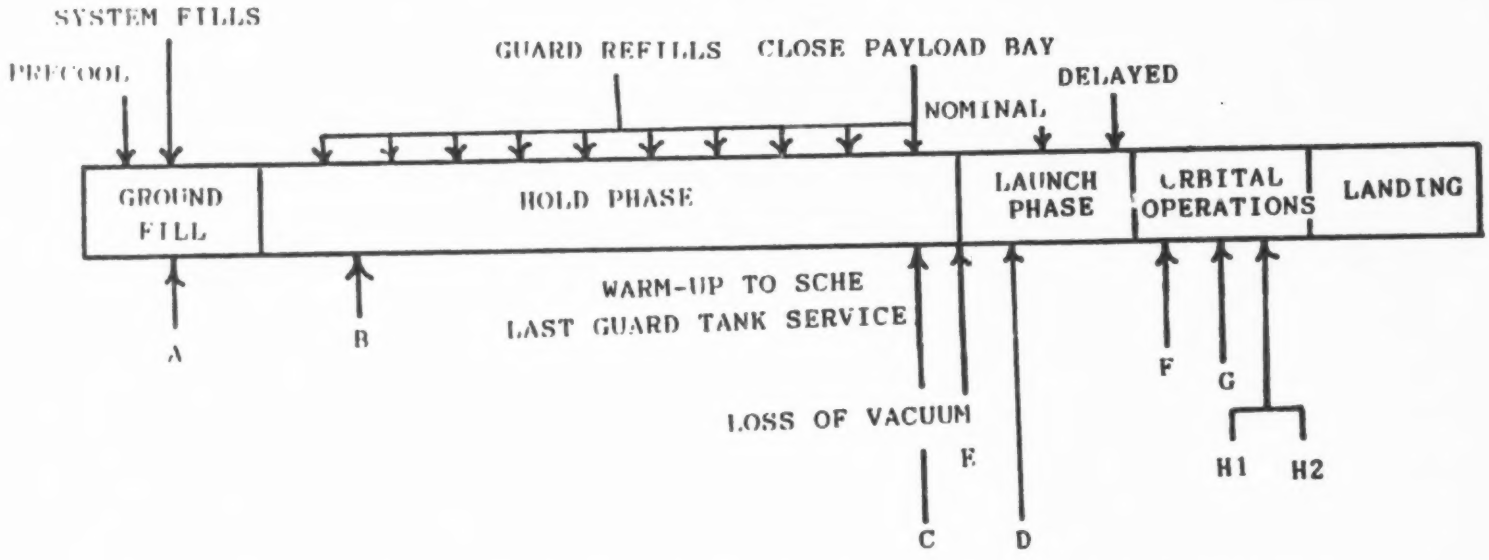

THE SEQUENCE OF EVENTS SHOWN IS TO ILLUSTRATE A POSSIBLE OPERATIONS SCENARIO. IT IS NOT INTENDED TO BE A TIMELINE, MORE AN EXAMPLE OF HOW THE PROPOSED SYSTEM MIGHT BE USED. KEY POINTS OF THIS SEQUENCE ARE THAT ONCE THE HE-II SYSTEM IS FILLED NO FURTHER OPERATIONS ARE REQUIRED EXCEPT PERIODIC TOP OFFS OF THE NBP GUARD TANK.

SHOWN ON THE LOWER PORTION OF THE SEQUENCE OF EVENTS (PREVIOUS PAGE) ARE EIGHT OPERATIONS THAT WILL BE DISCUSSED IN THIS SECTION. THESE OPERATIONS WERE SELECTED TO ILLUSTRATE SOME OF THE FEATURES OF THE TANKER. INCLUDED IS A VACUUM SHELL FAILURE, CONSIDERED THE WORST POSSIBLE CATASTROPHIC EVENT POSSIBLE, TO SHOW THE REQUIRED REDUNDANCY FOR SAFETY. EACH OPERATION IS DEPICTED BY AN ARROW WHICH INDICATES WHERE IN THE SEQUENCE THIS OPERATION MIGHT TAKE PLACE AND A LETTER IDENTIFIER. EACH LETTER CORRESPONDS TO A PARTICULAR OPERATION, AS LISTED ON THE FOLLOWING PAGE.

LIST OF SELECTED SCENARIOS

A - FILL, HE-II SYSTEM

B - VENTING OF NBP TANK

C - NBP TANK TRANSITION TO SUPERCRITICAL

D - SUPERCRITICAL VENTING "NBP TANK"

E - VACUUM SHELL FAILURE

F - STAND-BY ORBITAL VENTING

G - ORBITAL PLUMBING COOL-DOWN

H1 - ORBITAL TRANSFER WITHOUT VENTING

H2 - ORBITAL TRANSFER WITH VENTING

ORIGINAL PAGE IS
OF POOR QUALITY

THE SCHEMATIC SHOWN DEPICTS ONE OF THE POSSIBLE METHODS TO INITIALLY FILL THE TANK HE-II SYSTEM. IT UTILIZES A HE-II GROUND SUPPLY SYSTEM, AND TRANSFERS THE HELIUM INTO THE TANKER VIA A FOUNTAIN EFFECT PUMP (FEP) INSIDE THE SUPPLY DEWAR. AN ALTERNATIVE MECHANICAL PUMP MAY BE SUBSTITUTED FOR THE FEP. UTILIZATION OF GOOD COOL-DOWN PRACTICES IN ADDITION TO PROPERLY CONDITIONED FLUID FROM THE SUPPLY DEWAR MIGHT RESULT IN ELIMINATION OF VENTING DURING THIS OPERATION. ADDITIONALLY, THIS SCENARIO WOULD USE THE COUPLER AND TRANSFER LINE OF THE COUPLER PRIOR TO LAUNCH AND ELIMINATES THE NEED FOR A SEPARATE FILL SYSTEM. AN ALTERNATIVE FILL METHOD WOULD BE WITH HE-I. THIS WOULD ALSO REQUIRE A LARGE GROUND SUPPLY SYSTEM AND WOULD REQUIRE SEVERAL DIFFERENT TRANSFER/PUMP-DOWN OPERATIONS TO ACCOMPLISH A FILL.

AN ADDITIONAL GROUND CHECK FOR THE PUMPING SYSTEM IS AVAILABLE WITH THE PRESENT CONFIGURATION. A FLOW LOOP IS AVAILABLE WHICH WOULD FLOW HE-II FROM THE PUMP, THROUGH THE VENTURI FLOW METER, AND AROUND THROUGH THE "COLD" SECTION OF THE FILL LINE WITHIN THE TANK. THUS A PREFLIGHT CHECK OF A CRITICAL COMPONENT CAN BE ACCOMPLISHED WITHOUT DISTURBING THE GROUND STAND-BY VENT CONFIGURATION OF THE HE-II SYSTEM OR ADDING COMPLEX OPERATIONS/EQUIPMENT TO ACCOMMODATE A FULL FLOW.

SFHT

PLUMBING AND OPERATIONS

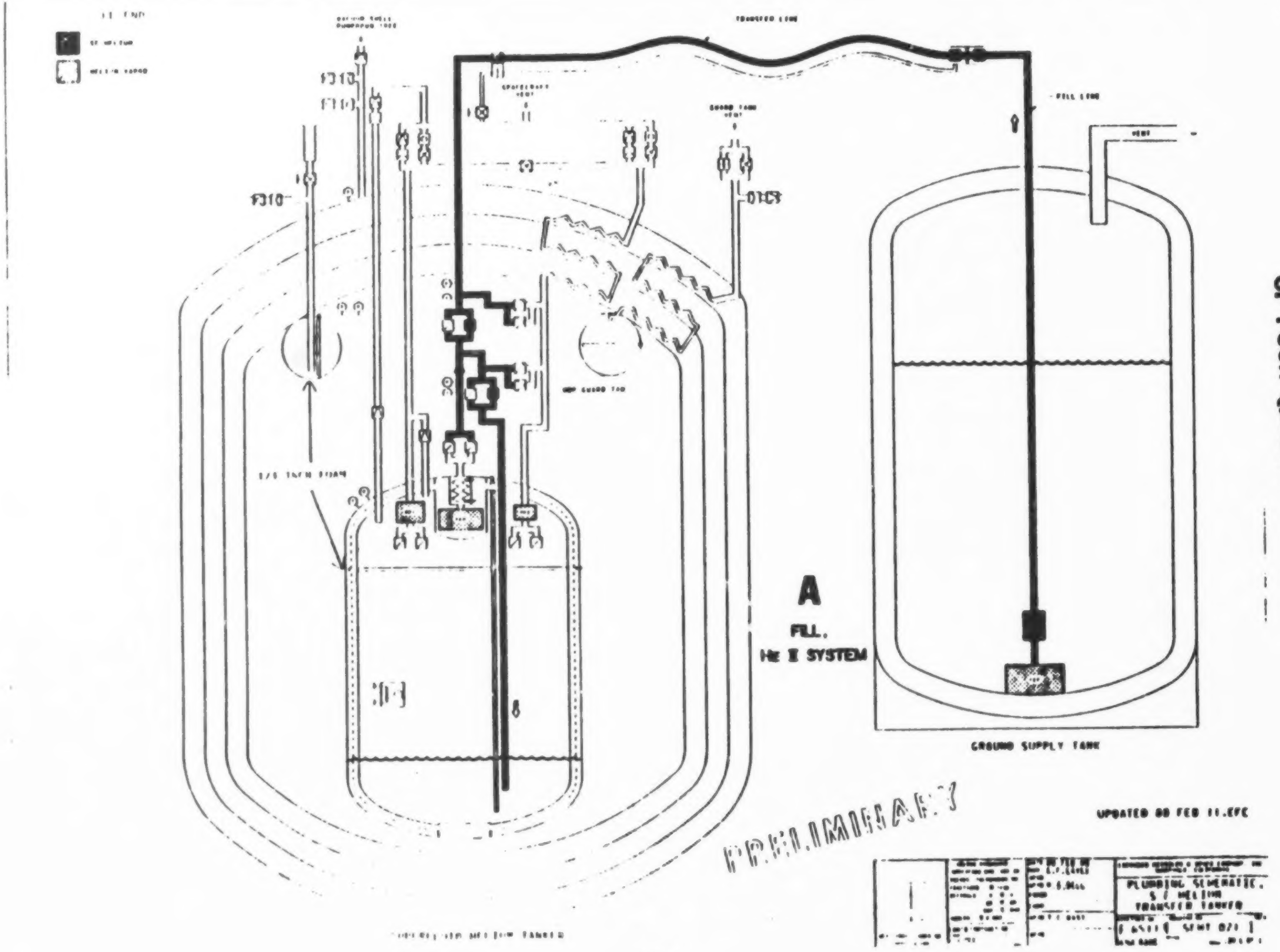

ORIGINAL PAGE IS
OF POOR QUALITY

AFTER THE INITIAL FILLS ON BOTH THE HE-II AND HE-I SYSTEMS HAVE BEEN COMPLETED, THE HE-II SYSTEM WILL BE CLOSED OFF AND NOT VENTED IN ITS GROUND STANDBY CONDITION. THE HE-I GUARD SYSTEM, WHICH IS USED TO INTERCEPT NEARLY ALL THE PARASITIC HEAT LOAD OF THE TANKER, IS ALLOWED TO BOIL-OFF. SINCE THE TWO SYSTEMS ARE SEPARATE THE GUARD TANK CAN BE FILLED AND VENTED AS MANY TIMES AS NECESSARY WITHOUT AFFECTING THE HE-II SYSTEM. THE SCHEMATIC SHOWN SHOWS THE HE-II SYSTEM IN ITS FILLED STANDBY CONFIGURATION WHILE THE GUARD TANK IS ALLOWED TO VENT THROUGH AN OPEN VALVE AT NBP CONDITIONS.

THE GROUND HOLD TIME IS 12 DAYS BUT CAN BE EASILY INCREASED BY ENLARGING THE NBP TANK.

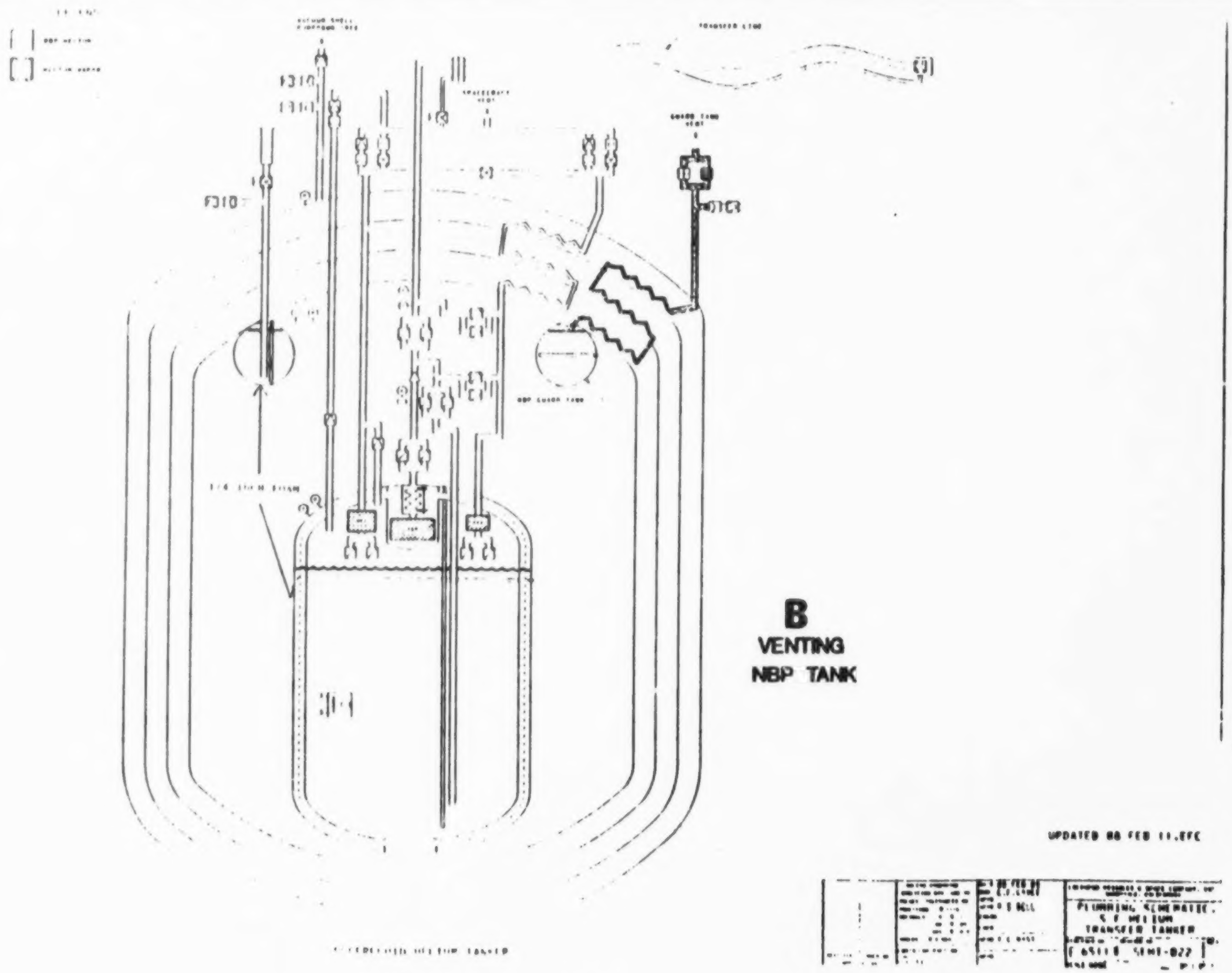

ORIGINAL PAGE IS OF POOR QUALITY

THIS SCHEMATIC SHOWS THE CONDITION DURING WHICH NBP VENT IS CLOSED AND THE TANK IS ALLOWED TO SELF-PRESSURIZE TO SUPER-CRITICAL CONDITIONS PRIOR TO LAUNCH. THIS SELF PRESSURIZING TIME TAKES A FEW HOURS. ONCE IN THE SUPERCITICAL CONDITION THE TANK CAN BE ADEQUATELY VENTING IN ORBIT UNDER LOW-G WITHOUT ELABORATE FLUID MANAGEMENT SYSTEMS.

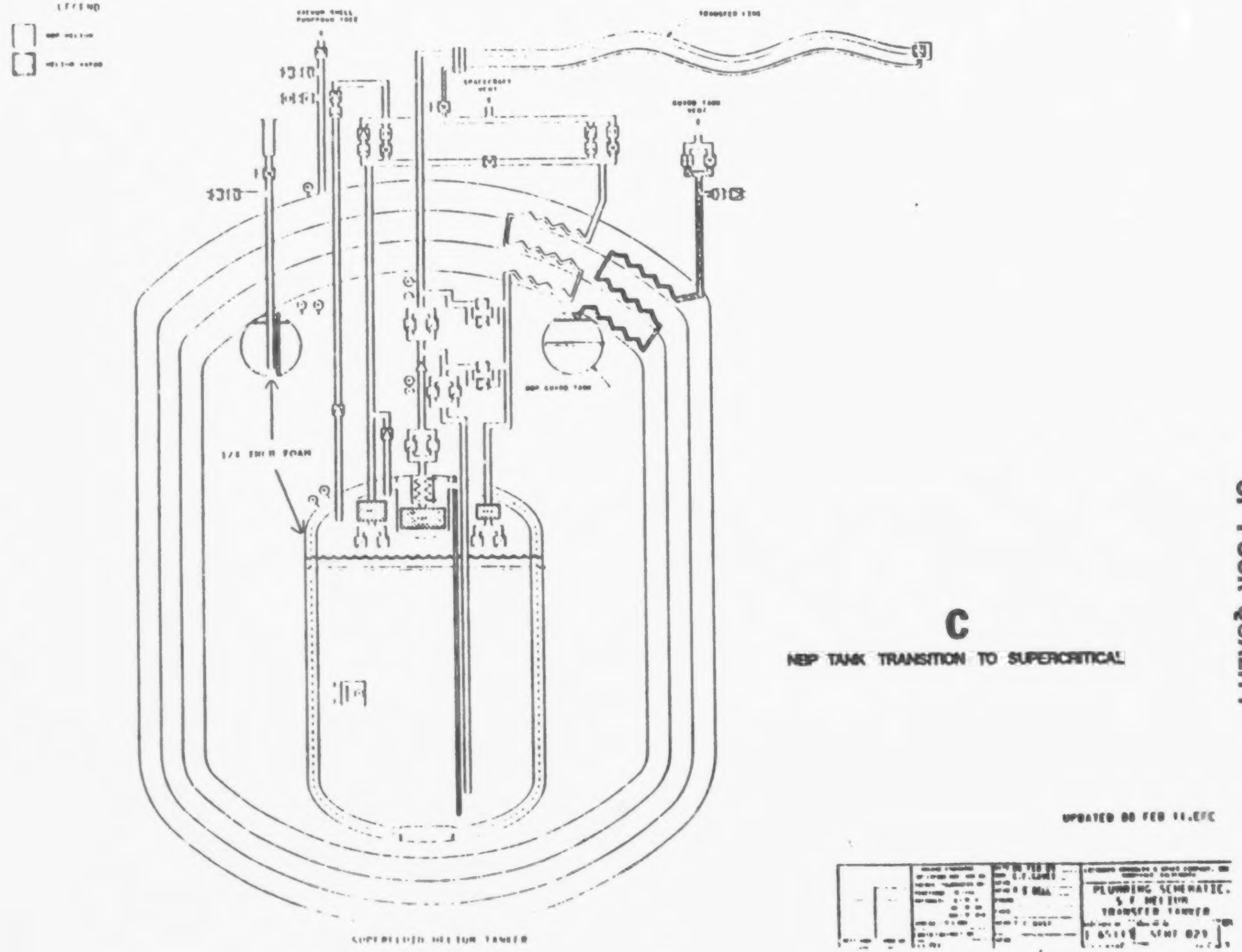

C

NBP TANK TRANSITION TO SUPERCRITICAL

ORIGINAL PAGE IS
OF POOR QUALITY

AT APPROXIMATELY 40 PSIA, AN ABSOLUTE PRESSURE RELIEF VALVE WOULD OPEN AND THE SYSTEM WOULD AGAIN BEGIN TO VENT.

THIS SUPERCRITICAL VENTING CAN TAKE PLACE ON THE GROUND OR IN ORBIT. THE HOLD TIME IN SUPERCRITICAL CONDITIONS IS APPROXIMATELY THE SAME AS FOR NBP CONDITIONS (12 DAYS), HOWEVER, THE VENTING RATE IS VARIABLE DURING SUPERCRITICAL VENTING AT CONSTANT PRESSURE.

SFHT

PLUMBING AND OPERATIONS

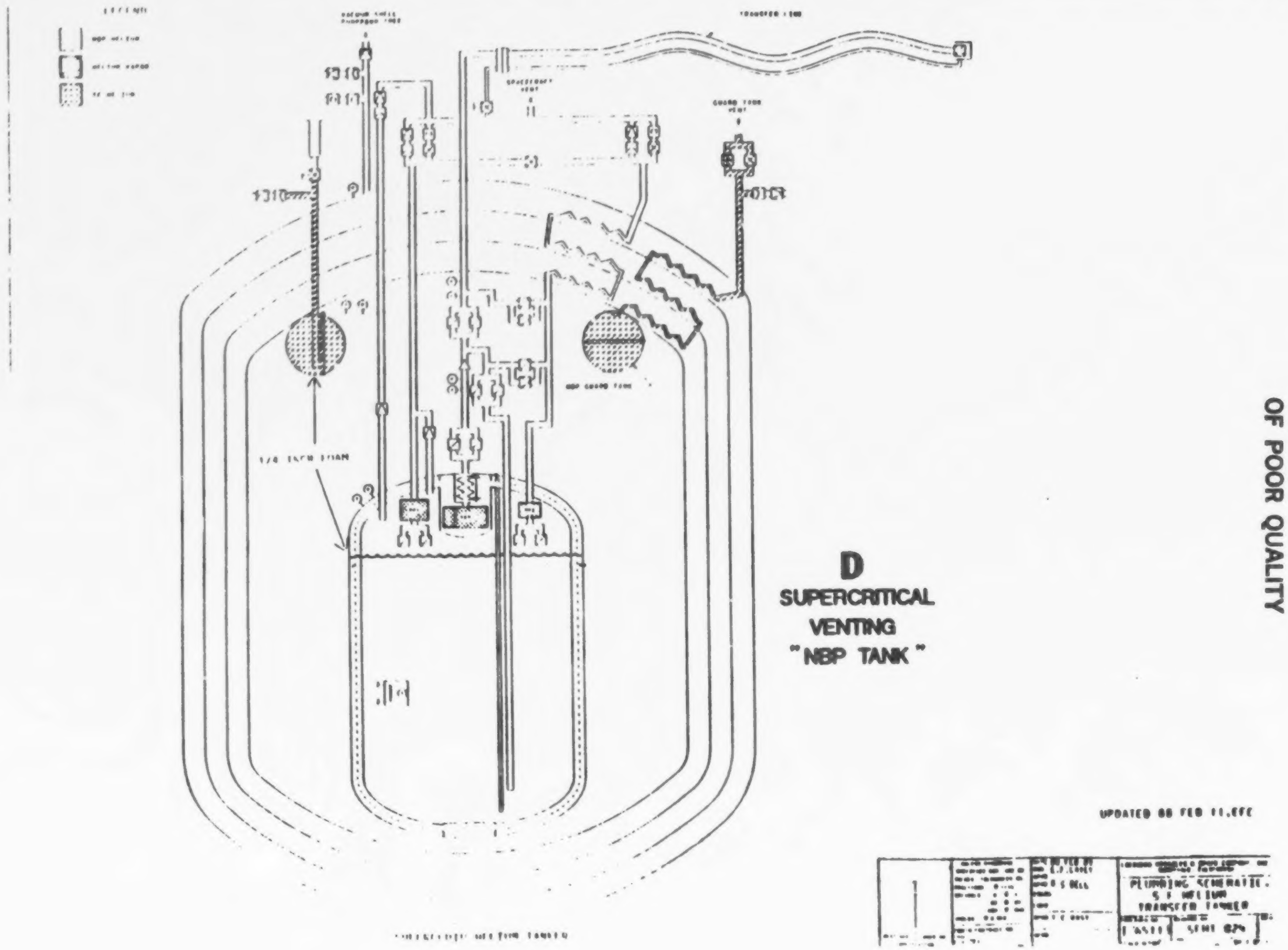

D

SUPERCRITICAL VENTING

"NBP TANK"

ORIGINAL PAGE IS OF POOR QUALITY

TO ILLUSTRATE SOME OF THE REQUIRED REDUNDANCY FOR SAFETY, THE SCENARIO OF THE VACUUM SHELL FAILURE WAS SELECTED FOR REVIEW. SINCE THERE ARE TWO CRYOGENIC FLUID SYSTEMS ON THE TANKER BOTH MUST BE ADEQUEATELY PROTECTED BY PARALLEL RELIEF PATHS ACTIVATED BY "PASSIVE" COMPOENTS. FOR THE HE-II SYSTEM, THERE IS A DEDICATED EMERGENCY RELIEF LINE AS WELL AS A BYPASS ON THE HIGH FLOW VENT LINE. BOTH OF THESE LINES ARE DESIGNED TO BE ACTIVATED BY HIGH FLOW RATE "COLD" RELIEF VALVES, SIMILAR TO BURST DISC/CHECK VALVE ASSEMBLY, PREVIOUSLY DEVELOPED FOR OTHER FLIGHT SYSTEMS. IF THE DEVELOPMENT OF THE "COLD" RELIEF VALVES IS NOT SUCCESSFUL, AN ALTERNATIVE APPROACH IS TO REPLACE THEM WITH A "COLD" BURST DISC ASSEMBLY WHICH HAS BEEN PREVIOUSLY DEVELOPED FOR OTHER FLIGHT SYSTEMS. IN EITHER CASE, THE LINES WOULD BE TIED INTO AN <u>INSULATED</u> 2-IN. EMERGENCY BAY VENT LINE AND ALLOWED TO VENT OVERBOARD. THE INSULATION IS <u>REQUIRED</u> TO PREVENT FORMATION OF LOX ON THE LINE. THE GUARD TANK SYSTEM HAS TWO SEPARATE "WARM" BURST DISC/CHECK VALVE ASSEMBLIES, ONE ATTACHED TO THE FILL LINE AND THE OTHER ATTACHED TO THE VENT LINE. VENTING WOULD BE ALLOWED INTO THE PAYLOAD BAY, UNDER SIMILAR CONDITIONS AS THE SHOOT EXPERIMENT. WITH ADDITION OF A 1/4-IN. LAYER OF CLOSED CELL PLASTIC FOAM ON THE SURFACES OF BOTH TANKS, THE HEAT LOAD DUE TO CONDENSATION IS ESTIMATED TO BE REDUCED BY A FACTOR OF 40, AND <u>THUS THE VENTING RATES WOULD BE GREATLY REDUCED</u>.

PLUMBING & OPERATIONS

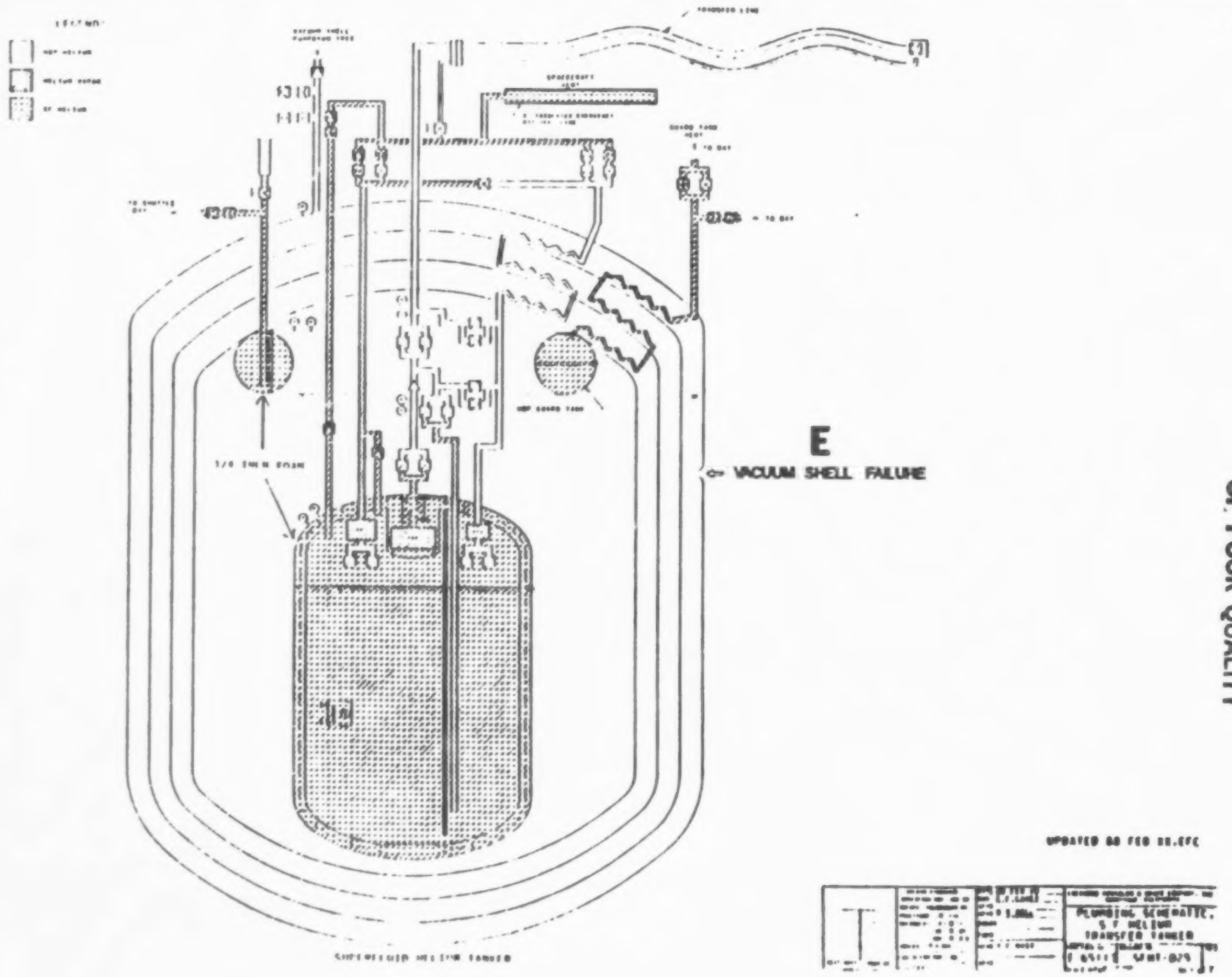

ORIGINAL PAGE IS
OF POOR QUALITY

ONCE THE SYSTEM HAS BEEN LAUNCHED, A STANDBY CONFIGURATION IS ESTABLISHED. THE SCHEMATIC SHOWS ONE OF THESE POSSIBLE CONFIGURATIONS; WITH THE HE-II SYSTEM VENTING TO SPACE THROUGH THE ORBITAL VENT POROUS PLUG, THE VAPOR-COOLED SHIELDS, AND OUT THE SPACECRAFT VENT. IT IS POSSIBLE FOR SHORT DURATION FLIGHTS NO STANDBY VENTING WOULD BE REQUIRED. HOWEVER, IF LONG TERM STORAGE ON-ORBIT OR FLUID CONDITIONING IS REQUIRED, THIS ORBITAL VENT WOULD BE USED. ALTHOUGH NOT SHOWN HERE, IT IS POSSIBLE THAT SOME VENTING FROM THE GUARD TANK MIGHT BE OCCURRING.

PLUMBING & OPERATIONS

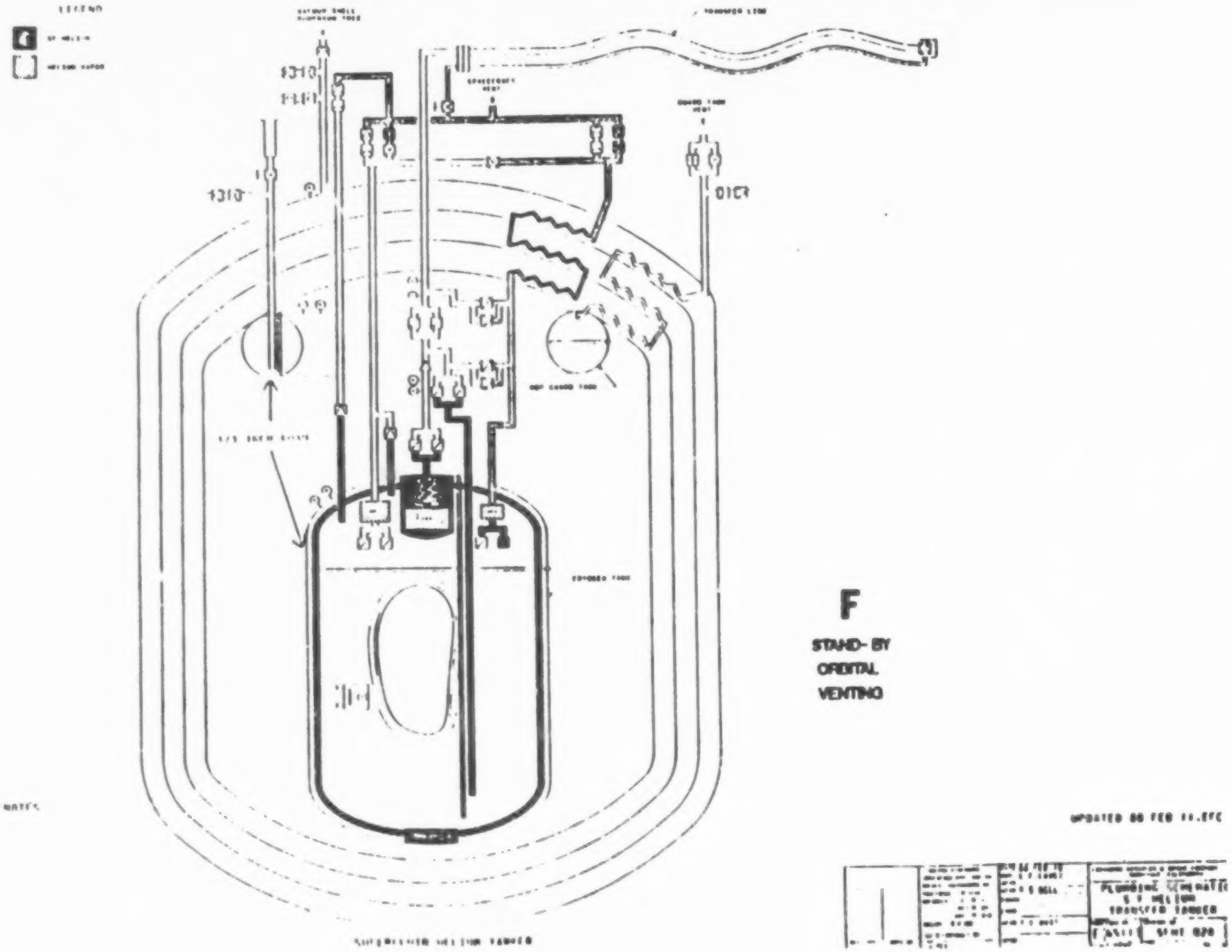

ORIGINAL PAGE IS
OF POOR QUALITY

ONE OF THE OPERATIONS WHICH WOULD HAVE TO BE ACCOMPLISHED DURING A TRANSFER SCENARIO IS THE INITIAL COOL-DOWN OF THE TRANSFER LINE, MATED COUPLER, AND RECEIVER PLUMBING (AS REQUIRED). THE SCHEMATIC DEPICTS ONE WAY THIS WOULD BE ACCOMPLISHED. AFTER THE EVA TO CONNECT THE TANKER TO THE RECEIVER, THE RECEIVER VALVES ARE POSITIONED FOR COOL-DOWN. THE TANKER WOULD INITIATE FLOW AT A PREDETERMINED RATE AND PUSH COLD FLUID THROUGH THE FLOW PATH AND OUT TH RECEIVER VENT. IT WAS ASSUMED THAT THE RECEIVER WOULD SUPPLY THE VENT FOR ALL RECEIVER ORIENTED TRANSFER OPERATIONS, IF THE TANKER WERE REQUIRED TO SUPPLY THE OVERALL OPERATIONAL VENT ADDITIONAL HARDWARE WOULD BE REQUIRED.

SFHT PLUMBING & OPERATIONS

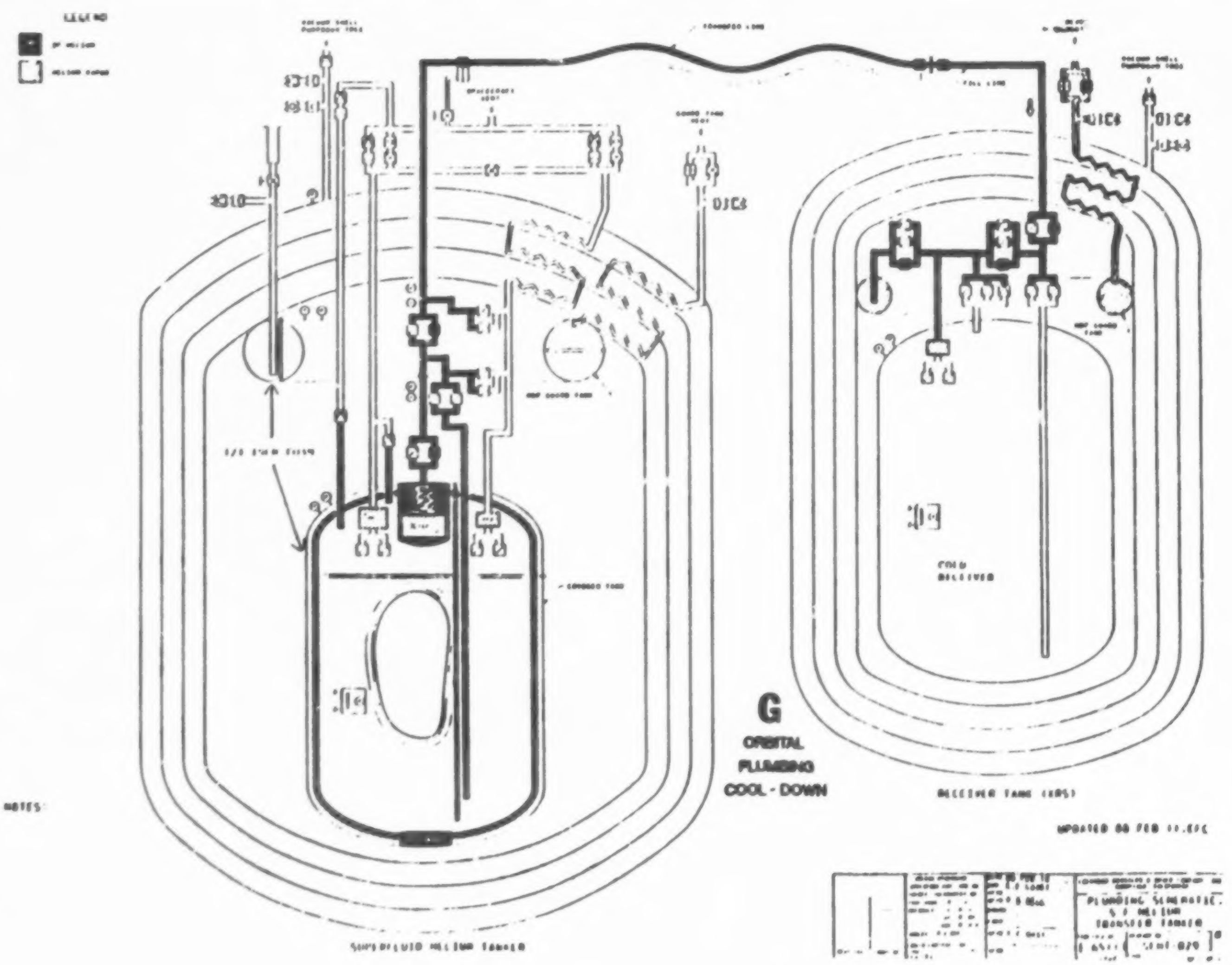

ORIGINAL PAGE IS
OF POOR QUALITY

DEPENDING ON THE RECEIVER SIZE, SOME OF THE TRANSFERS MAY BE ACCOMPLISHED WITHOUT THE REQUIREMENT OF VENTING EITHER THE TANKER OR THE RECEIVER. THE SECTION ON HELIUM TRANSFER MODELLING SHOWS THAT A FAIRLY LARGE QUANTITY OF HE-II CAN BE TRANSFERRED FROM THE TANKER WITHOUT VENTING. IF THE RECEIVER IS ALREADY COLD AND/OR THE SUPPLY HE-II TEMPERATURE IS VERY LOW, THEN IT IS CONCEIVABLE THAT A TRANSFER COULD BE ACCOMPLISHED WITHOUT VENTING. THIS POSSIBILITY IS SHOWN SCHEMATICALLY ON THE NEXT PAGE.

SFHT

PLUMBING & OPERATIONS

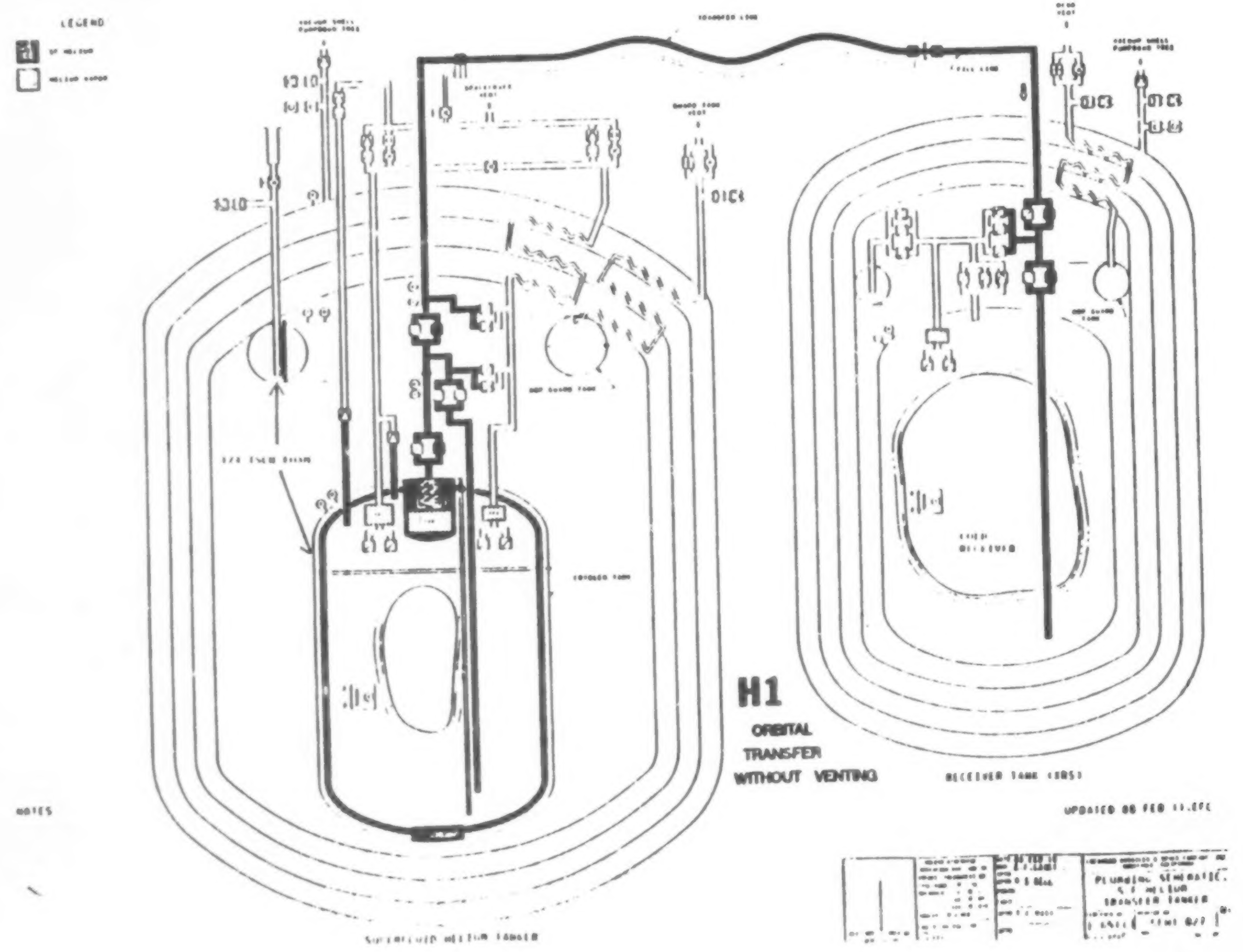

ORIGINAL PAGE IS
OF POOR QUALITY

TRANSFER OF LARGE QUANTITIES OF HE-II OR TRANSFER TO "WARM" RECEIVERS WILL REQUIRE VENTING OF EITHER THE TANKER OR RECEIVER OR BOTH. THE SCHEMATIC SHOWN ILLUSTRATES A "COLD" RECEIVER BEING SERVICED BY THE TANKER. BOTH OF THE VENT PATHS ARE SHOWN IN USE, HOWEVER, IT IS PROBABLY NOT REQUIRED SINCE THE HIGH FLOW VENT IS SIZED FOR THE MAXIMUM VENTING REQUIRED. SINCE THE RECEIVER IS SAID TO BE "COLD", NO VENTING IS SHOWN. IT ASSUMED THAT BY VENTING THE TANKER, PROPERLY CONDITIONED HE-II IS BEING TRANSFERRED WITH THE MINIMUM OF TEMPERATURE RISE IN THE RECEIVER.

SFHT

PLUMBING & OPERATIONS

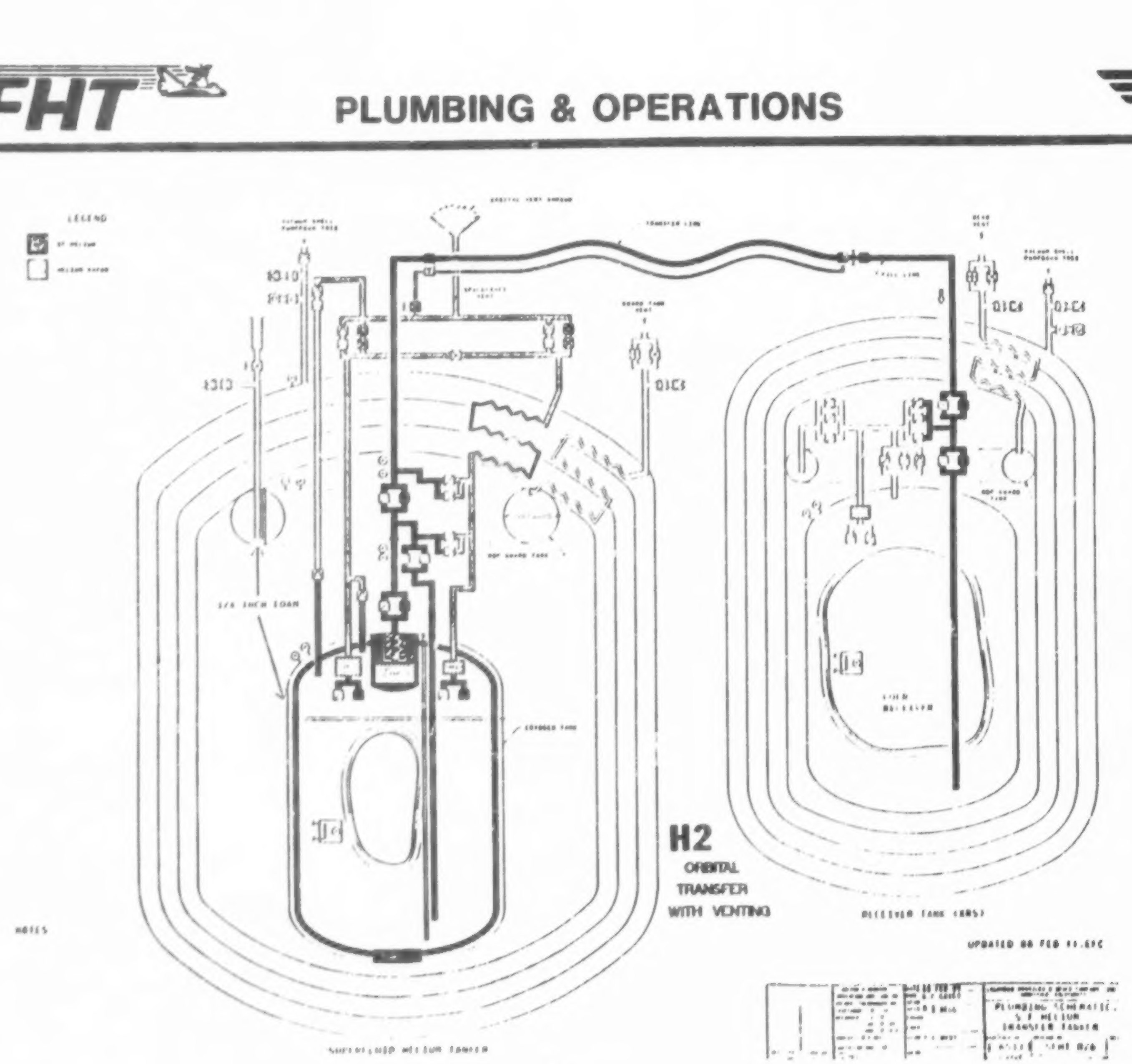

ORIGINAL PAGE IS OF POOR QUALITY

C-3

THE TABLE OF THE ESTIMATED VENTING REQUIREMENTS FOR THE FLUID SUBSYSTEMS OF THE SFHT ARE SHOWN HERE. ALTHOUGH NOT SHOWN, IT IS POSSIBLE TO HAVE VENTING OF THE GUARD SYSTEM WHILE ON ORBIT, HOWEVER, THE FLOW RATES SHOULD BE ON THE SAME ORDER AS THE GROUND OPRATIONS AND LENGTH OF TIME THAT VENTING WOULD OCCUR WOULD BE VERY LIMITED.

SFHT

PLUMBING AND OPERATIONS

ESTIMATED VENTING REQUIREMENTS

	FILL	HOLD	LAUNCH	EM OPS	ON-ORBIT	
					S/B	TRANSFER
GUARD SYSTEM (g/s)	A/R	1.8E-2	1.8E 2	4.0*	NONE	NONE
SHFE SYSTEM	A/R	NONE	NONE	160.0*	7.4E-3	1.67**

*BASED ON ROUGH CALCULATIONS WITH A FOAM LAYER OF 1/4-IN. ON BOTH TANKS
**MAXIMUM FOR SCENARIO NO. 2
A/R: AS REQUIRED DURING OPERATIONS, VALUE TBD

A BRIEF SUMMARY IS PROVIDED ALONG WITH SOME OF THE MAJOR CONCERNS FOR THE SYSTEM AS IT IS PRESENTLY CONFIGURED. THERE ARE SEVERAL MAJOR ITEMS OF INTEREST WITHIN THIS FLUID SYSTEM. FIRST THE DESIGN OFFERS A VERY LONG HOLD TIME ON THE HE-II SYSTEM DUE TO A SEPARATE SIMPLY OPERATED HE-I GUARD TANK SYSTEM. THE ADDITION OF THE CLOSED CELL PLASTIC FOAM AS A THERMAL BARRIER APPEARS TO LOWER SINGIFICANTLY THE VENT RATES FOR CATASTROPHIC EVENTS. THE DESIGN ONLY UTILIZES COMPONENTS WHICH HAVE BEEN DEVELOPED OR ARE UNDER DEVELOPMENT. SEV- ERAL PREFLIGHT CHECKS ARE "DESIGNED" INTO THE SYSTEM TO SIMPLIFY OPERATIONS.

THE PRIMARY CONCERN WITH THE SYSTEM IS IN THE AREA OF VENTING OF FLUIDS, BOTH THE HE-I AND HE-II. THE ASSUMPTION IS THAT VENTING THE HE-I GUARD TANK CAN BE ACCOMMODATED WITHIN THE PAYLOAD BAY IN A SIMILAR MANNER AS SHOOT. THE HE-II VENT MADE AVAILABLE FOR USE BY SFHT WHILE ONBOARD THE SHUTTLE IS A 2-IN. VENT LINE WHICH RUNS THE LENGTH OF THE PAYLOAD BAY AND DUMPS OVERBOARD NEAR THE AFT BULKHEAD. THIS LINE IS NOT SLATED TO BE INSULTED, HOWEVER, IN AN EMERGENCY VENT SCENARIO THE CONDENSATION OF AIR ON THIS LINE WOULD BE A DEFINITE SAFETY HAZARD. ADDITIONALLY, THERE ARE OTHER THERMAL AND FLOW PROBLEMS WHICH MAY RESULT FROM THIS LINE NOT BEING INSULATED. THIS SECTION MADE THE ASSUMPTION THAT THIS LINE WOULD BE INSULATED. IN LIGHT OF THESE CONCERNS, A CLEARER PICTURE OF THE ENTIRE ORBITER VENT SYSTEMS FOR PAYLOADS IS NEEDED.

A CONCERN IS ALSO EXPRESSED IN THE COMPONENT AREA SINCE WE BASELINED USE OF THE "COLD" HIGH FLOW PRESSURE RELIEF VALVES AND THEIR DEVELOPMENT IS QUESTIONABLE. A SUBSTITUTE COMPONENT IS AVIALABLE, HOWEVER, IN THE "COLD" BURST DISC.

SFHT

PLUMBING AND OPERATIONS

SUMMARY

- SYSTEM IS TWO-FAULT SAFETY TOLERANT
- SYSTEM IS SINGLE-FAULT TOLERANT FOR MISSION SUCCESS
- SEPARATE GUARD AND HE-II SYSTEMS
- MAXIMUM USE OF SHOOT HARDWARE
- CATASTROPHIC VENT RATES VERY LOW
- GUARD TANK GIVES EXCELLENT HOLD TIMES
- CONCERNS
    - COLD PRESSURE RELIEF VALVES
    - VENTING IN SHUTTLE BAY
    - INSULATED EMER[illegible]

SFHT

FLUID SUBSYSTEM SUMMARY

SFHT

FLUID SUBSYSTEM SUMMARY

-- A 5000 L CYLINDRICAL GEOMETRY IS PROPOSED AS THE BASLINE.

-- THE SYSTEM IS DESIGNED FOR EASY GROUND SERVICING WITH A LONG HOLD TIME (NBP TANK).

-- THE PROPOSED PLASTIC FOAM ON THE TANK GREATLY REDUCES CATASTROPHIC FLOW RATES AND MAKES SAFETY GOALS MUCH EASIER TO ACHIEVE.

-- THE DESIGN IS BASED ON SOTA OR NEAR SOTA TECHNOLOGY.

-- MANY TRANSFER SCENARIOS CAN BE ACCOMPLISHED WITHOUT VENTING DURING TRANSFER.

CONCEPTUAL SYSTEM DESIGN

SFHT

DESIGN OBJECTIVES

- MINIMIZE CARGO BAY LENGTH
- ADAPTABLE TO ORBITER OMV, SPACE STATION, ELV
- EASE OF MAINTENANCE
- EVA COMPATIBLE
- FLEXIBILITY IN DESIGN
- USER COMPATIBILITY

SFHT

SFHT SYSTEM CONCEPT

- O SYSTEM IS ADAPTABLE, VERSATILE & SAFE IN RESUPPLYING SUPERFLUID HELIUM FROM HOST TO EITHER FREE FLYERS OR SPACE STATION ATTACHED PAYLOADS AND LABORATORY MODULES
- O DOES NOT REQUIRE MAJOR HARDWARE MODIFICATION TO ACCOMODATE LARGE OR SMALL USERS
- O CURRENT USERS --
  - O SMALL FREE FLYER - AXAF (1996) 200 LITERS
  - O LARGE FREE FLYER - SIRTF (1997) 4000 LITERS
  - O ATTACHED PAYLOAD - ASTROMAG (1996) 4600 LITERS
  - O LAB MODULE EXPERIMENT - MMPS/CPPF (1996) & LPE (1995) 200 & 300 LITERS

* REDUCED SET IS REASONABLE NEAR TERM REQUIREMENTS

SFHT SFHT CONCEPTS CONT.

- O SYSTEM INTERFACES
  - O HOSTS: ORBITER, SPACE STATION, OMV & ELV
  - O USERS: FREE FLYERS, ATT. PAYLOADS, LAB EXP.
  - O SERVICING: HE II COUPLING, ELECTRICAL UMBILICAL, BERTHING
  - O CREW: EVA/IVA
  - o GSE: GROUND LOADING AND HANDLING, TRANSPORTATION

SFHT

SYSTEM DESCRIPTION

- SFHT SUBSYSTEMS
  - FLUID
  - STRUCTURE/GSE
  - AVIONICS/POWER
  - THERMAL CONTROL
- BASELINE FLUID SUBSYSTEM (IPR #2)
  - 5000 LITER HE II TANK
- 224 LITER GUARD TANK
- PASSIVE ORBITAL DISCONNECT SUPPORTS (PODS)
- 1/4 INCH THICK PLASTIC FOAM ON TANKS
- LIQUID MANAGEMENT SYSTEM
- CRYOSTAT COMPONENTS

OPERATIONAL SCENARIO

SFHT

OPERATIONAL SCENARIO

o THE NOMINAL OPERATIONAL SCENARIO

1 o TRANSPORTATION TO THE LOADING FACILITY

2 o LOADING SUPERFLUID HELIUM

3 o TRANSPORTING TO THE PCR

4 o TOPPING-OFF OF SFHT

5 o LOADING INTO THE ORBITER

6 o LAUNCH

7 o ASCENT

8 o RENDEZVOUS

9 o DOCKING OF FREE FLYER (FF), e.g. AXAF

10 o EVA #1, TRANSFER LINE/MATE

11 o TRANSFER OF HeII

12 o EVA #2, DEMATE

OPERATIONAL SCENARIO

13 o EVA SECURE

14 o PREP FOR LANDING

15 o LANDING

16 o POST LANDING

17 o DETANKING

18 o STORAGE

O SEQUENCE ITEMS 8 THROUGH 14, THE DETAILED ORBITAL SCENARIO FOLLOWS

- O AXAF IS USED AS THE FREE FLYER (FF) EXAMPLE

AXAF SERVICING

- O MISSION ELAPSED TIME MET 1:
  - O ORBITER OMS-2 BURN COMPLETED (MET 46 Min) ENDS ASCENT PHASE
  - O TELEMETRY STATUSES - ORU DATA, SFHT AND AXAF XRS CAUTION AND WARNING LIMITS INVOKED
  - O PAYLOAD DOOR OPENED (1 HR)
  - O PRE-SLEEP ACTIVITY (3 HRS)
- O MET 2:
  - O OMV RELEASED FROM ORBITER VIA RMS
  - O OMV ACTIVATED (ORBITER HAD BACKED OFF) AND RENDEZVOUS WITH AXAF (4 HRS) AND RETURNS
  - O WITHIN 2 NM, OMV SEPARATES FROM AXAF AND ORBITER (2 HRS) MANEUVERS TO AXAF
- O MET 3:
  - O ORBITER RMS AND SFHT POWERED UP AND CHECKED OUT
  - O AXAF APERTURE DOOR CLOSED AND LATCHED, HI GAIN ANTENNA RETRACTED AND STOWED, S/A CHARGING DISABLED, RETRACTED AND LATCHED
  - O RMS GRAPPLES AXAF AND BERTHS IT TO SFHT MOTORIZED DOCKING LATCHES

SFHT

SERVICING (CONT.)

- 0 MET 4:
  - 0 TOUCH TEMPERATURES VERIFIED (-181^{0}F TO 235^{0}F)
  - 0 EVA PREPARATION PRE-BREATHING (4 HRS), AIRLOCK EGRESS (20 Min)
  - 0 BEGIN AXAF BATTERY CHANGEOUT (1 HR)
  - 0 CONNECT AXAF XRS/SFHT FLUID AND ELECTRICAL UMBILICALS (20 Min)
  - 0 PREPARE CRYOGENIC TRANSFER LINE CONNECT (35 Min)
  - 0 IVA VERIFY STATUS DEWAR, CRYOSTAT PRESSURS AND TEMPERATURE VALVE POSITIONS CLOSED

SERVICING (CONT.)

- SFHT COMMANDED TO STANDBY MODE (5 Min)
- CUTOFF DRIVE POWER TO ALL VALVES
- VERIFY STATUS OF COUPLING SEALS
- ASTRONAUT CONNECTS TRANSFER LINE COUPLER TO MATTING AXAF COUPLER (20 Min)
- ASTRONAUT MOVES TO SAFE (TBD) DISTANCE PERIMETER (5 Min)
- IVA PREPS FOR COOLDOWN OPS, LEAK CHECKS (15 Min)
- EVA ACTIVITY BY ASTRONAUT INTO AIRLOCK INGRESS (35 Min)
- BEGIN COOLDOWN OPERATION FROM AFD
  - 4 HRS COLD
  - 10 HRS WARM
- TRANSFER LINE AND COUPLING IS PRECOOLED BY OPENING XRS VALVE AND SFHT FILL VALVES
- WITH XRS DEWAR COLD, TRANSFER OF He II COMMENCES INITIAL FLOW RATE @ 200 4 HR AND INCREASES IN STEPS

SERVICING (CONT.)

- O COMMAND OPEN XRS VALVES FOR VENTING
- O FEP SET TO LOW FLOW RATE UNTIL 4 K REACHED
- O TRANSFER CONTINUES AND FEP HEATER INCREASE RATE TO 800 L/HR UNTIL DEWAR IS FILLED (2 - 4 HRS)
- O FULL TANK INDICATED BY PRESSURE MONITOR SPIKES FROM BULK FLUID VAPOR PRESSURE AND FEP HEAD PRESSURE MONITORS
- O RECONFIGURE TO STANDBY MODE BY CLOSING XRS VALVES
- O IN THE EVENT A COMMAND REJECT OCCURS, THE MAJORITY VOTE LOGIC WILL SELECT A SECOND AVIONICS CPU STRING AND WILL PROCEED
- O MANUAL OVERRIDES MAY BE AVAILABLE AT THE AFD
- O IN THE EVENT THAT AN EMERGENCY ABORT IS NEEDED, THE PYRO ACTIVATED EMERGENCY RELEASE DEVICES ARE ACTIVATED AT THE AFD CONSOLE

SERVICING (CONT.)

- O MET 5: (EVA II)
  - O EVA PREP FOR PRE BREATHING STARTS (4 HRS) FOLLOWED BY AIRLOCK EGRESS (20 Min)
  - O WITH ACCEPTABLE DEWAR AND VALVE PRESSURES AND TEMPERATURE, TRANSFER LINE TOUCH TEMPS, AND HELIUM RESIDUALS REMOVED FROM THE TRANSFER LINE, THE DRIVER POWER TO VALVES IS CUT OFF. COUPLING SEAL POSITION POWER REMAINS ON
  - O PREPS FOR COUPLING REMOVAL COMMENCE (10 Min)
  - O ASTRONAUT DISCONNECTS TRANSFER LINE COUPLER (20 Min) AND AXAF XRS/SFHT UMBILICAL (15 Min)
  - O VIEWS THE ROTATION OF THE AXAF (FOR SI CHANGEOUT) FROM A SAFE DISTANCE
  - O ASTRONAUT CHANGES OUT AXAF SI (1 HR)
    - O MAY INCLUDE CHANGEOUT OF FAILED ORU's (30 Min)
    - O PERFORMS STOWAGE OF EQUIPMENT AND TOOLS (20 Min)
    - O ASTRONAUT PROCEEDS TO AIRLOCK INGRESS (35 Min)

SERVICING (CONT.)

- 0 MET 6:
  - 0 FSS SUPPORT RING WITH AXAF ATTACHED IS ROTATED TO AN RMS GRAPPLING POSITION IN PREPARATION FOR SEPARATION (5 Min)
  - 0 RMS ATTACHED TO AXAF GRAPPLE FIXTURE
  - 0 FSS LATCHES RELEASED ALONG WITH UMBILICAL INTERFACES
  - 0 THE AXAF IS TRANSFERRED FROM THE TANKER TO POSITION ADJACENT TO THE CARGO BAY DOOR SILL AND DEPLOYED
  - 0 POCC COMMANDS VIA TDRSS DEPLOY HI GAIN ANTENNAS AND SOLAR ARRAYS
  - 0 AXAF IS RELEASED
  - 0 THE ORBITER MANEUVERS TO A 2 MILE SEPARATION DISTANCE AND THE OMV DOCKS TO THE AXAF
  - 0 OMV THEN REBOOST AXAF TO ITS 600KM ORBIT
  - 0 OMV IS RECOVERED AND STOWED
  - 0 SFHT IS RECONFIGURED FOR REENTRY, CAUTION AND WARNING IS IN EFFECT
  - 0 PRE-LANDING PREPARATIONS COMPLETE

SERVICING (CONT.)

- DEORBIT
- AFTER LANDING AND POST LANDING ORBITER PROCEDURES ARE COMPLETED THE SFHT IS UNLOADED AND STOWED IN ITS TRANSPORTER
- IN HE-II FACILITY RESIDUALS ARE REMOVED AND THE TANKER IS PREPARED FOR STORAGE
- SFHT RELOADED INTO TRANSPORTER AND MOVED TO STORAGE

STRUCTURAL/GSE SUBSYSTEM

TANKER BASIC

THE STRUCTURE IS DESIGNED SO THAT THE CRYOSTAT MAY BE REMOVED FOR MAINTENANCE WITHOUT DISASSEMBLY OF STRUCTURE. CRYOSTAT GROUND MAINTENANCE OF THE WARM AND COLD VALVES, FEP, ETC IS ANTICIPATED.

TWO VENT LINES WILL BE CONNECTED TO THE GENERIC OVERBOARD VENT LINES AT THE ORBITS SIP's.

THE FSS DOCKING RING IS ROTATABLE. IT CAN BE TILTED BY A CREW MEMBER WHO WHOULD HAVE TO INSTALL OREDESIGNED STRUTS.

CONCEPTUALLY THE COUPLING FIXTURE COULD BE ATTACHED TO THE SECOND VENT LINE AND MECHANIZED TO ALLOW JETTISON OF RESIDUAL HELIUM BEFORE REENTRY: IF REQUIRED.

ALL CARGO BAY AVIONICS AND CONTROLS ARE HOUSED IN THE TWO ENCLOSURES ON THE STRUCTURE.

CREW AIDS ARE NOT SHOWN.

ORIGINAL PAGE IS
OF POOR QUALITY

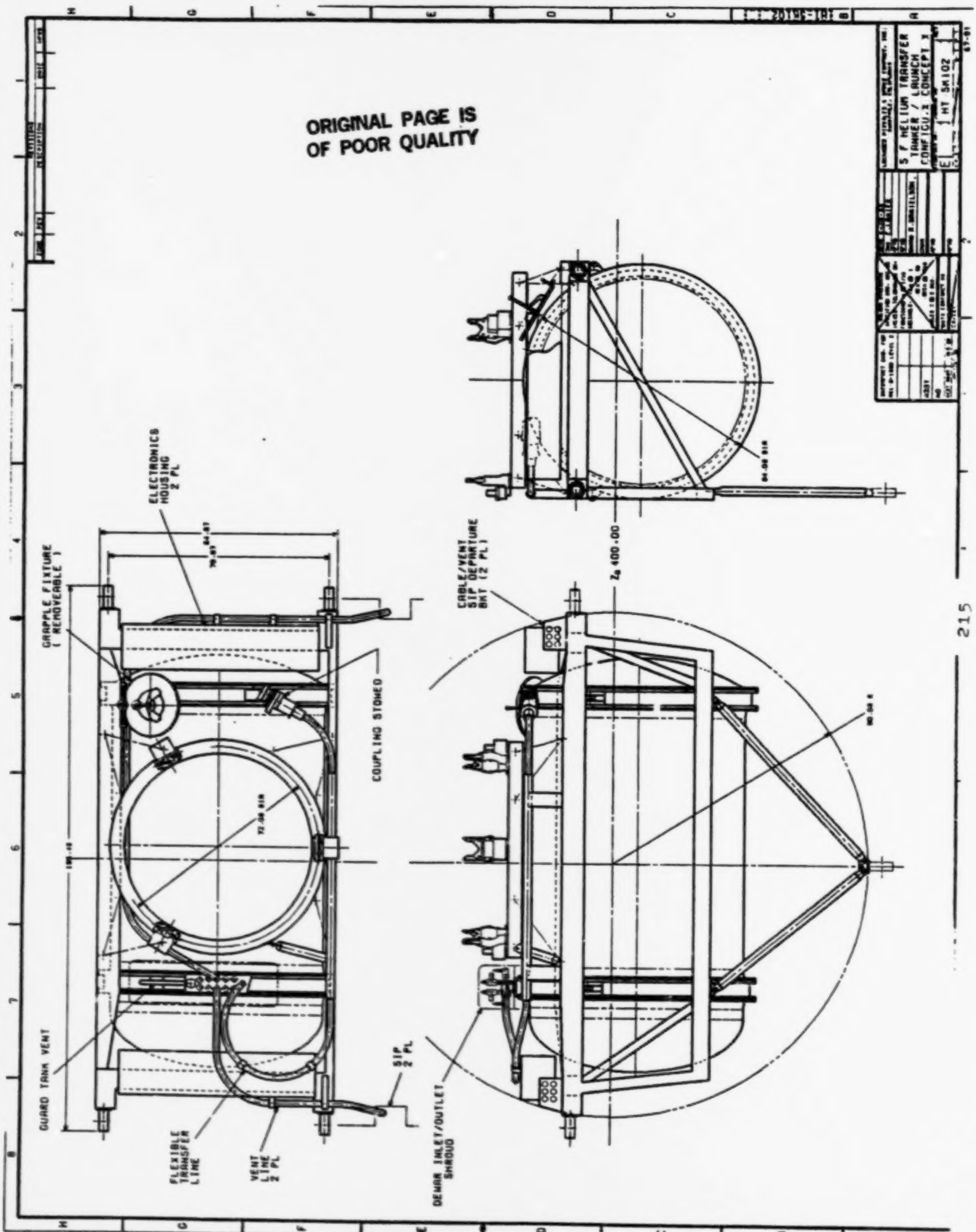

<u>5000 LITER CRYOSTAT</u>

THE 5000 LITER CRYOSTAT IS SHOWN BELOW.

THE PLUMBING AND SUPPORT RING HAVE BEEN MOVED, SINCE THE PRELIMINARY FLUID SUBSYSTEM CONCEPT, TO FACILITATE SERVICING OF THE WARM AND COLD COMPONENTS.

ORIGINAL PAGE IS
OF POOR QUALITY

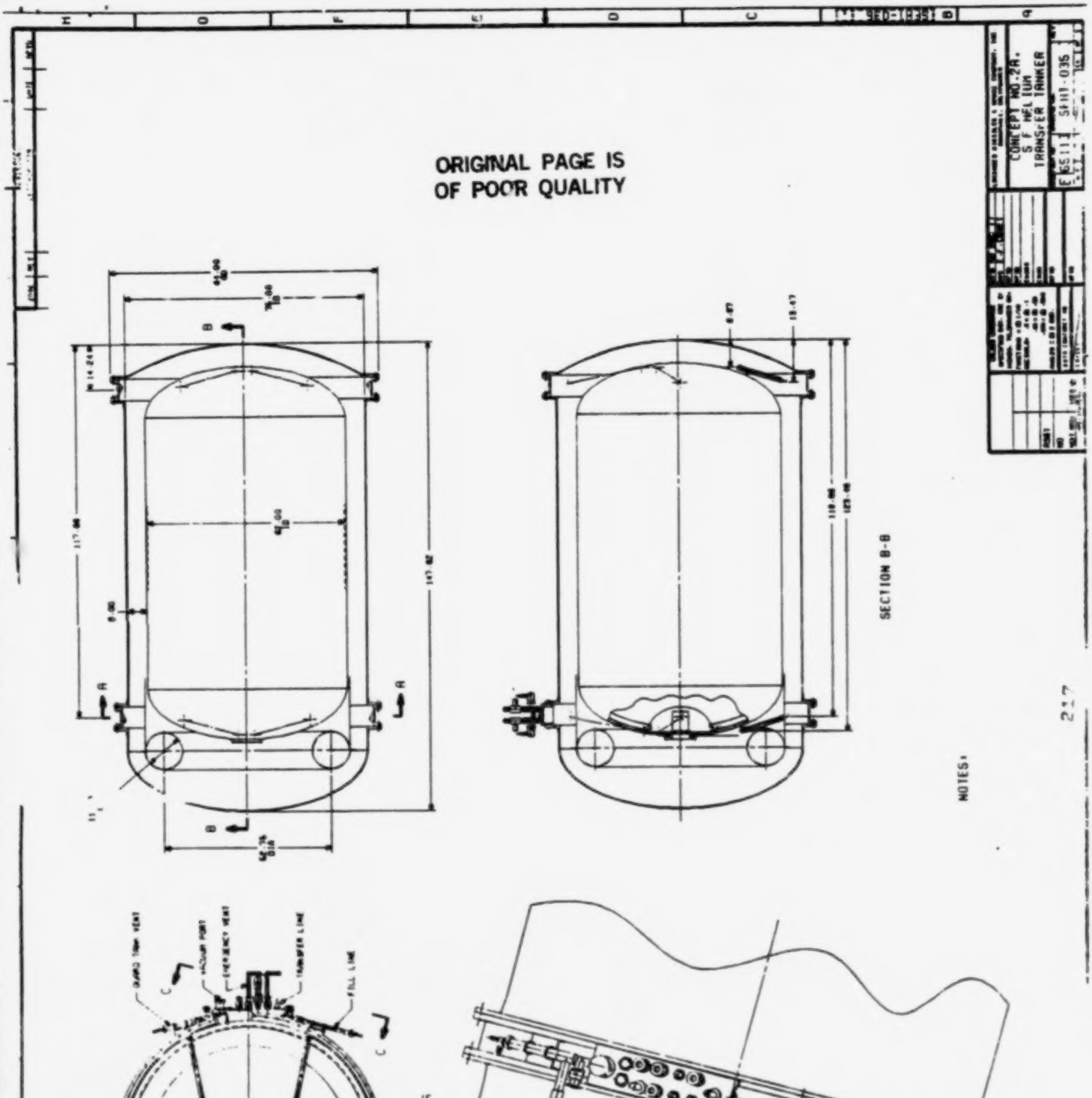

TANKER TO AXAF EVA COUPLING OPERATION

IN COORDINATION WITH THE AXAF PROGRAM OFFICE THE LOCATION OF THE CRYOGENIC COUPLER WAS DETERMINED.

THE ASTRONAUT COUPLING THE TRANSFER LINE TO XRS COUPLING USING THE PFR IS SHOWN BELOW. OTHER CREW AIDS PREIMARILY HAND HOLDS AND TANSFER RAILS ARE NOT SHOWN.

AN ELECTRICAL UMBICAL TO CONTROL THE XRS VALVES WILL BE LOCATED IN THE SAME AREA.

XRS VALVE CONTROLS ARE NOT ACCESSIBLE FROM THE AXAF UMBILICAL.

ORIGINAL PAGE IS
OF POOR QUALITY

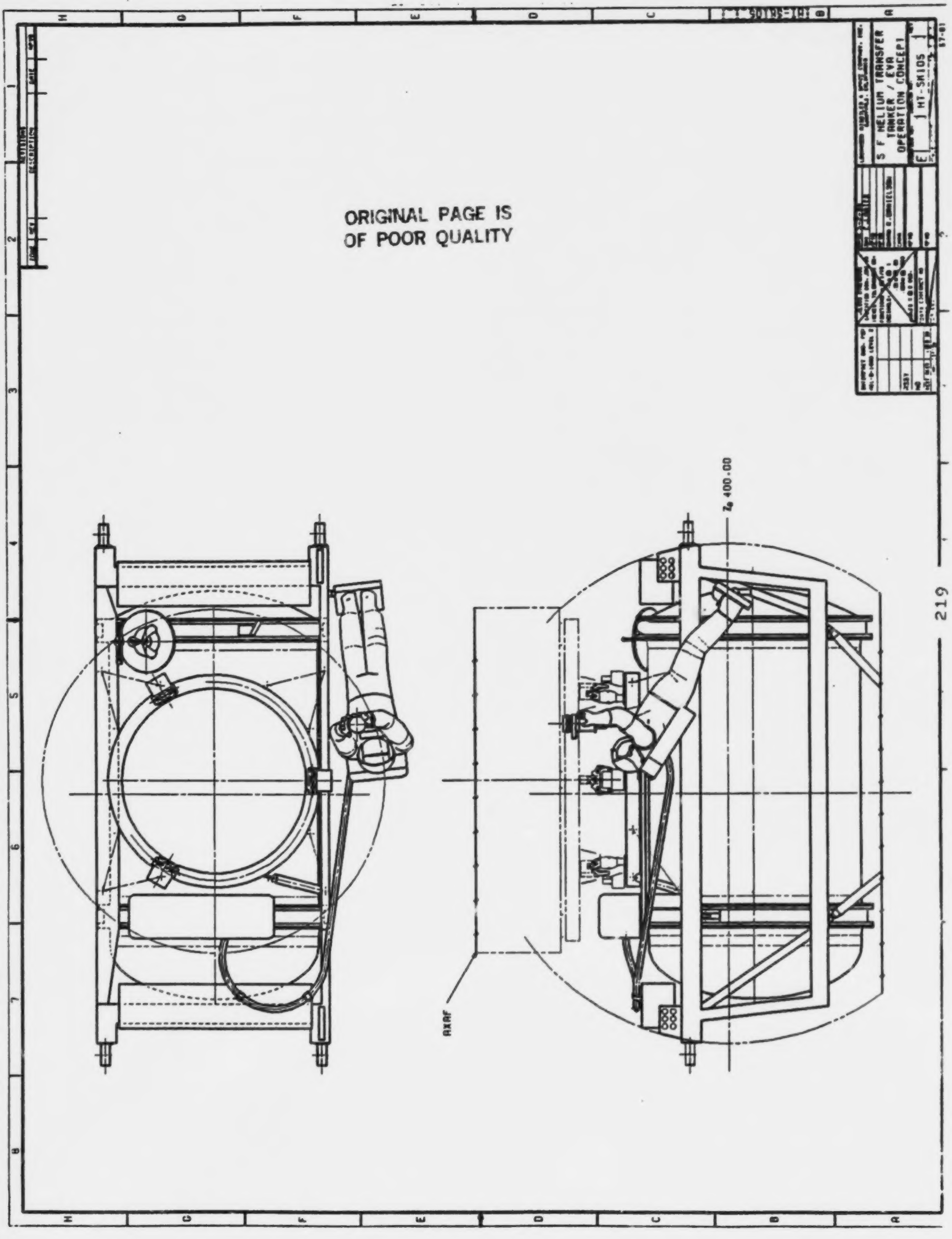

OMV/SPACE STATION SIA ADAPTER

AN FSS COMPATIBLE DOCKING STRUCTURE CAN BE ADDED TO THE TANKER AND THE KEEL FITING REMOVED AS SHOWN IN THE FACING DRAWING

ORIGINAL PAGE IS
OF POOR QUALITY

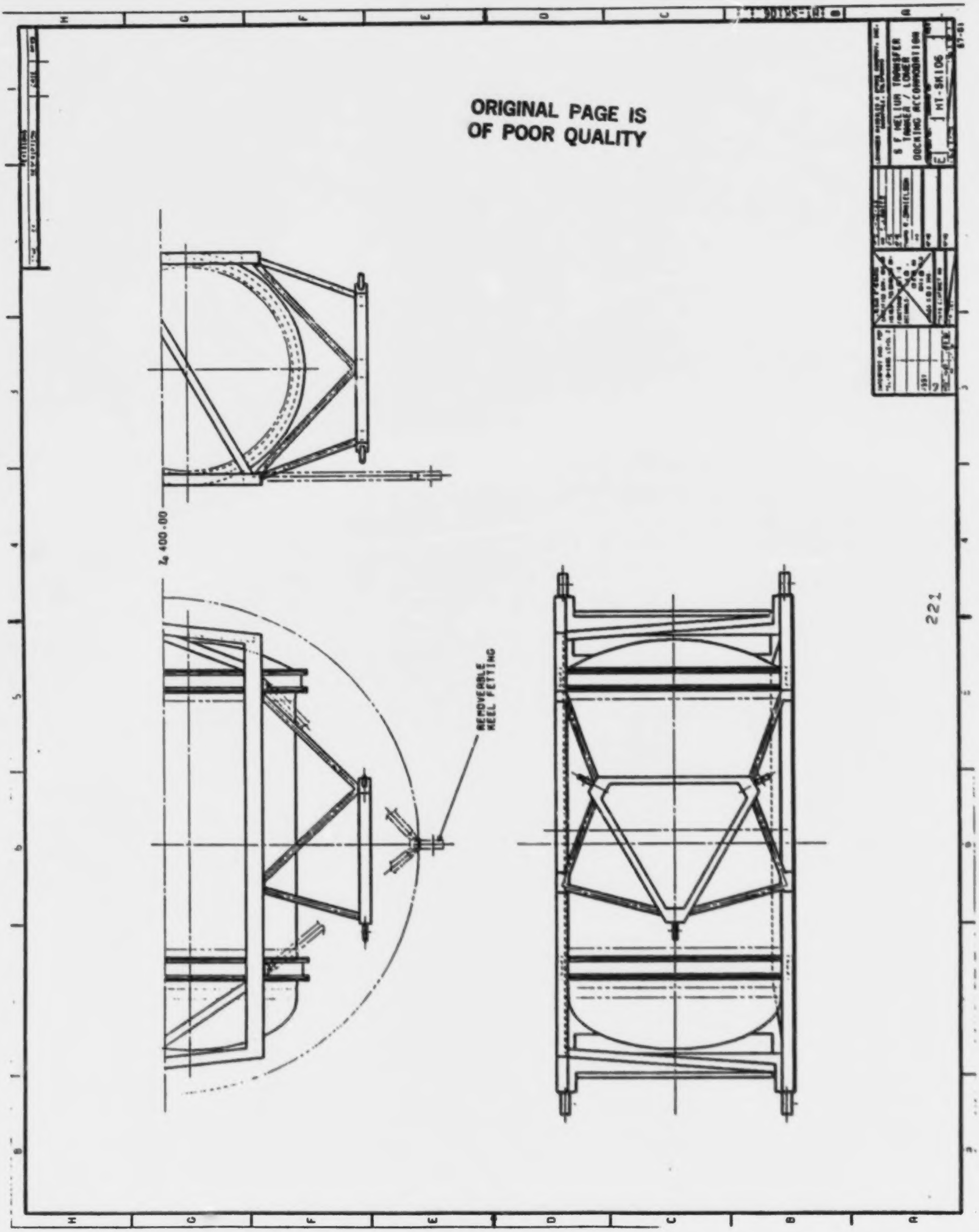

OPTIONAL ORU CARRIER

THE CONCEPT BELOW SHOWS AN OPTIONALLY INSTALLED ORU CARRIER. IF AXAF HAS TO HAVE ITS HELIUM II RESUPPLIED BETWEEN NORMAL SERVICING MISSIONS, AND IT REQUIRES UP TO FOUR ORU'S, THE TANKER CAN SUPPORT THIS MISSION WITHOUT THE LARGE ORU CARRIER THAT AXAF REQUIRES FOR PLANNED ON-ORBIT SERVICING. THIS CONCEPT CAN POTENTIALLY SAVE THE AXAF PROGRAM MILLIONS OF DOLLARS IN TRANSPORTATION COSTS. IT WOULD ALSO ALLOW MANY MORE MANIFESTING OPPORTUNITIES FOR A CONTINGENCY REPAIRS MISSION.

ORIGINAL PAGE IS
OF POOR QUALITY

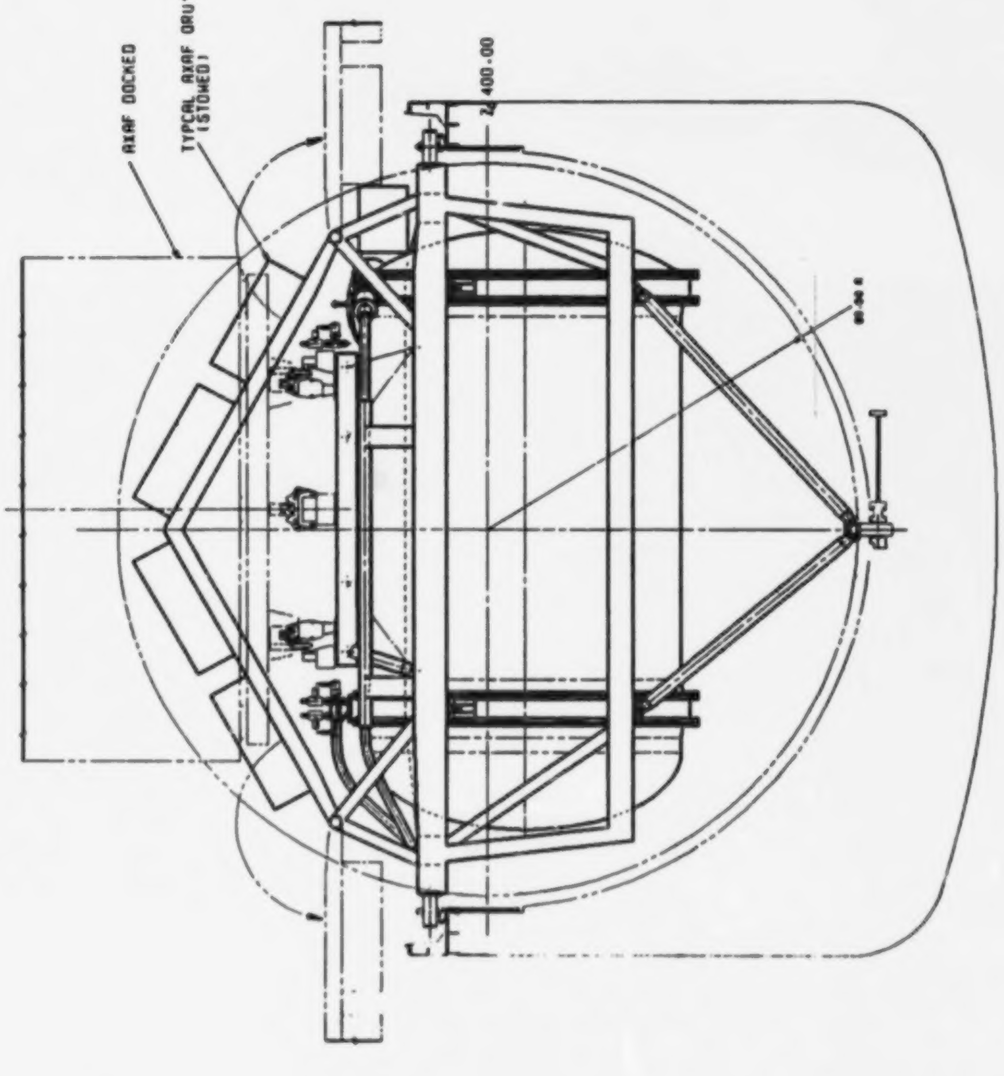

5000 LITER TANKER LAUNCH WEIGHT

CONTINGENCY WEIGHT GROWTH IS INCLUDED IN THE DEWAR BUT NOT THE STRUCTURE.

SFHT

SFHT WEIGHTS (5000 LITERS)

	LBS
DEWAR (5250 LITERS, 5% ULLAGE)	
DRY WEIGHT	2412
HELIUM II (95% LIQUID @ 1.8K)	1600
NBP HELIUM (95% LIQUID @ 4.2K)	39
SFH DEWAR	4051
STRUCTURE	
(INCLUDING COUPLING, TRANSFER LINE, GRAPPLE FITTING)	810
TOTAL	4860
OPTION #1 DOCKING RING AND ACCESSORIES	615
TOTAL	5475
OPTION #2 OMV/SPACE STATION ADAPTER	209
TOTAL	5684

ORIGINAL PAGE IS
OF POOR QUALITY

970 LITER TANKER

THIS TANKER WAS DESIGNED TO SUPPLY 50% OF THE USERS, THOSE WHO REQUIRED LESS THAN 970 LITERS OF HE-II.

THIS CONCEPT SAVES $3.31 M IN TRANSPORTATION COSTS PER FLIGHT.

ONLY A NEW STRUCTURE HAS TO BE BUILT AND QUALIFIED AS THE DEWAR IS IDENTICAL TO THE 5000 LITER DEWAR WITH THE CENTER CYLINDRICAL SECTION REMOVED.

THIS CONCEPT WILL PAY FOR THE TANKER IN 6 FLIGHTS OR LESS, WITH A DESIGN LIFE OF 50 FLIGHTS.

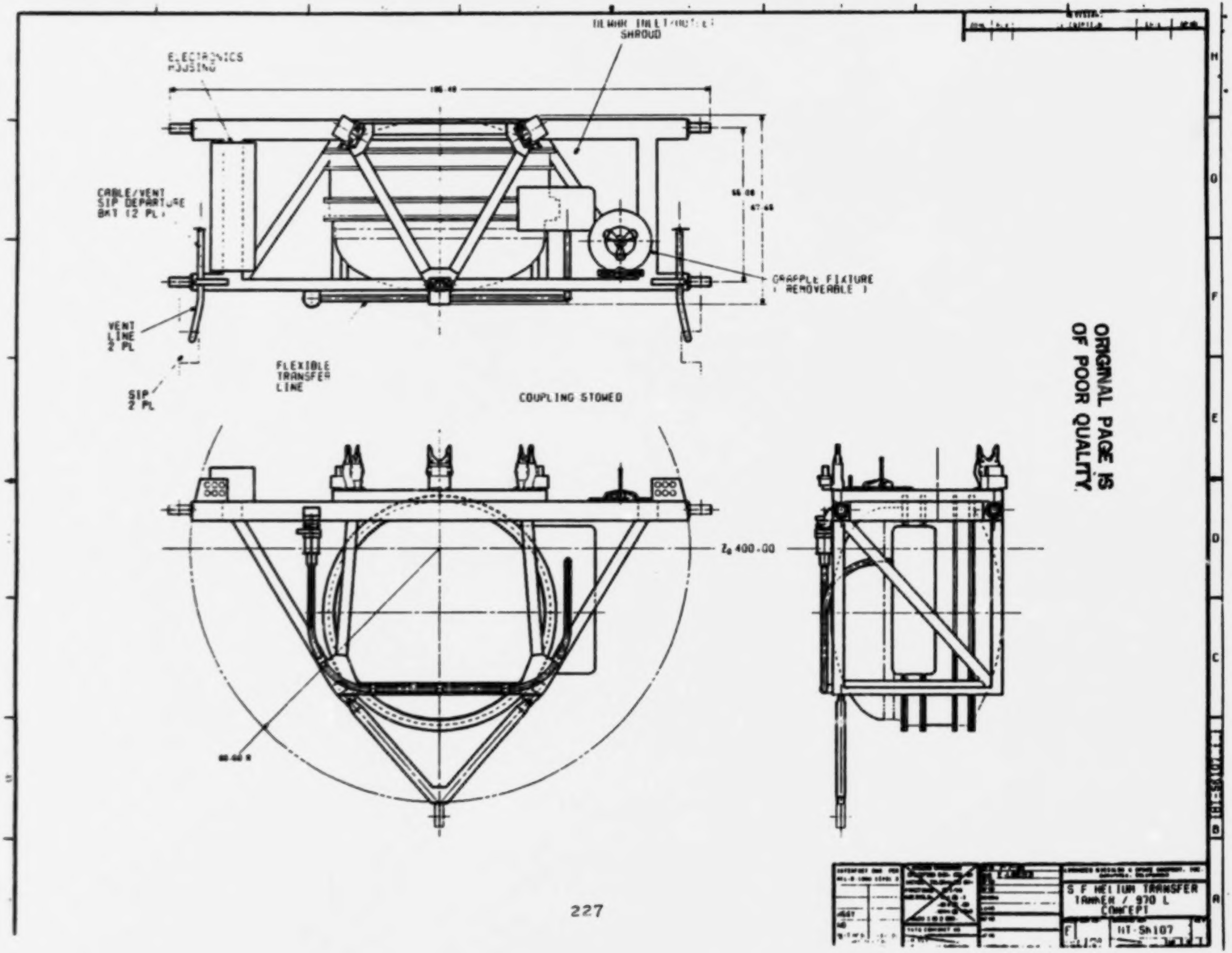

ORIGINAL PAGE IS OF POOR QUALITY

970 LITER DEWAR

THE DESIGN OF THE 970 LITER DEWAR IS SHOWN BELOW

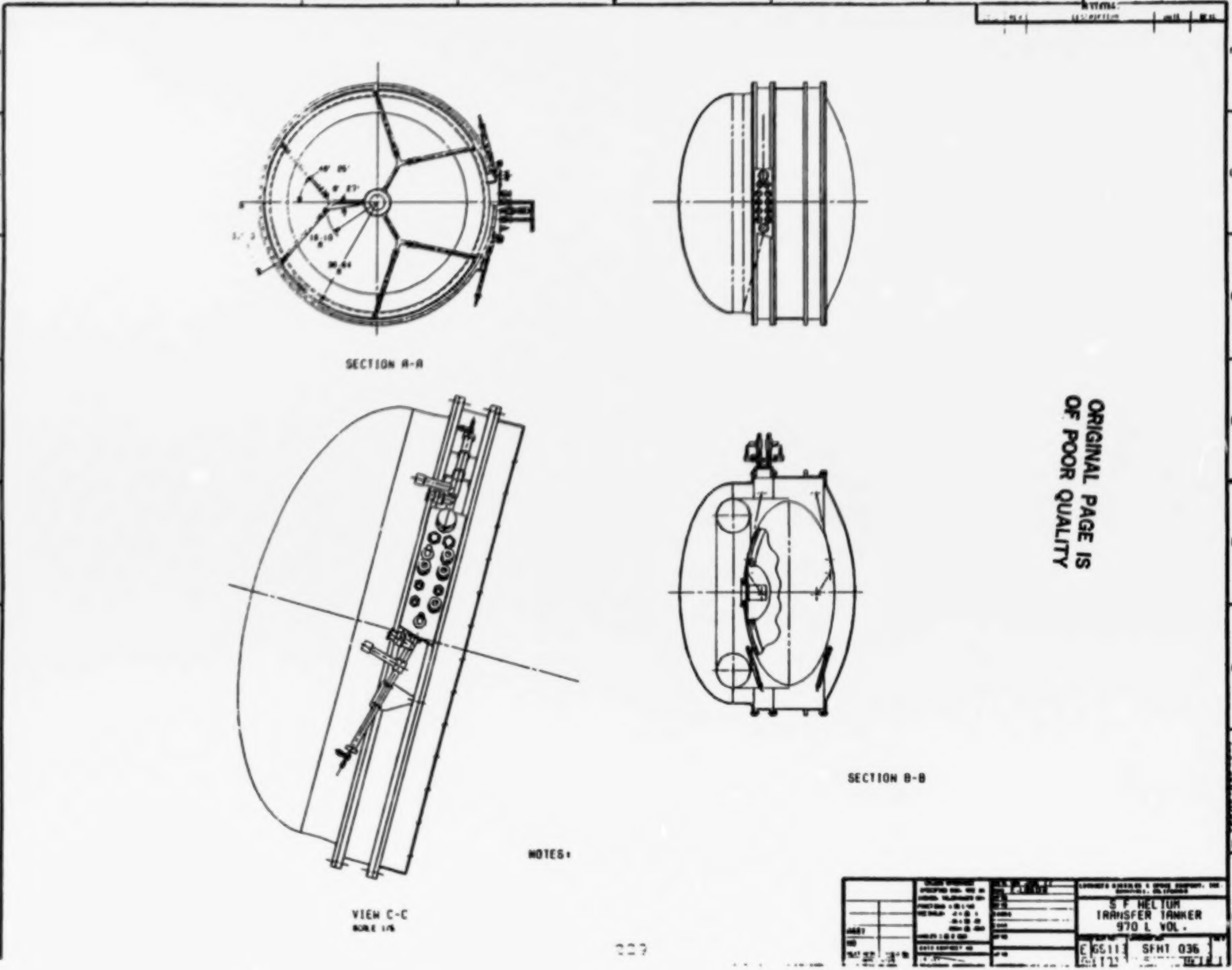

ORIGINAL PAGE IS
OF POOR QUALITY

970 LITER TANKER WEIGHT

THE STRUCTURE DOES NOT INCLUDE WEIGHT GROWTH CONTINGENCY

SFHT

SFHT WEIGHTS (970 LITERS)

ORIGINAL PAGE IS OF POOR QUALITY

		LBS
DEWAR		1008
HELIUM I (95% LIQUID @ 1.8K)		310
NBP HELIUM (95% LIQUID @ 4.2K)		20
	TOTAL	1338
STRUCTURE		
(INCLUDING COUPLING, TRANSFER LINE GRAPPLE FIXTURE)		583
	TOTAL	1921
OPTION #1 DOCKING, RING, AND ACCESSORIES		300
	TOTAL	2221

ASSEMBLY, HOLDING AND TILTING FIXTURE FOR THE SFHT

THIS EXISTING FIXTURE BUILT FOR ANOTHER PROGRAM COULD BE MADE AVAILABLE TO THE SFHT PROGRAM.

IT IS DESIGNED SO THAT THE TANKER CAN BE INSTALLED INTO THE ORBITER WITHOUT A FIT CHECK.

SFHT

ASSEMBLY, HOLDING AND TILTING FIXTURE

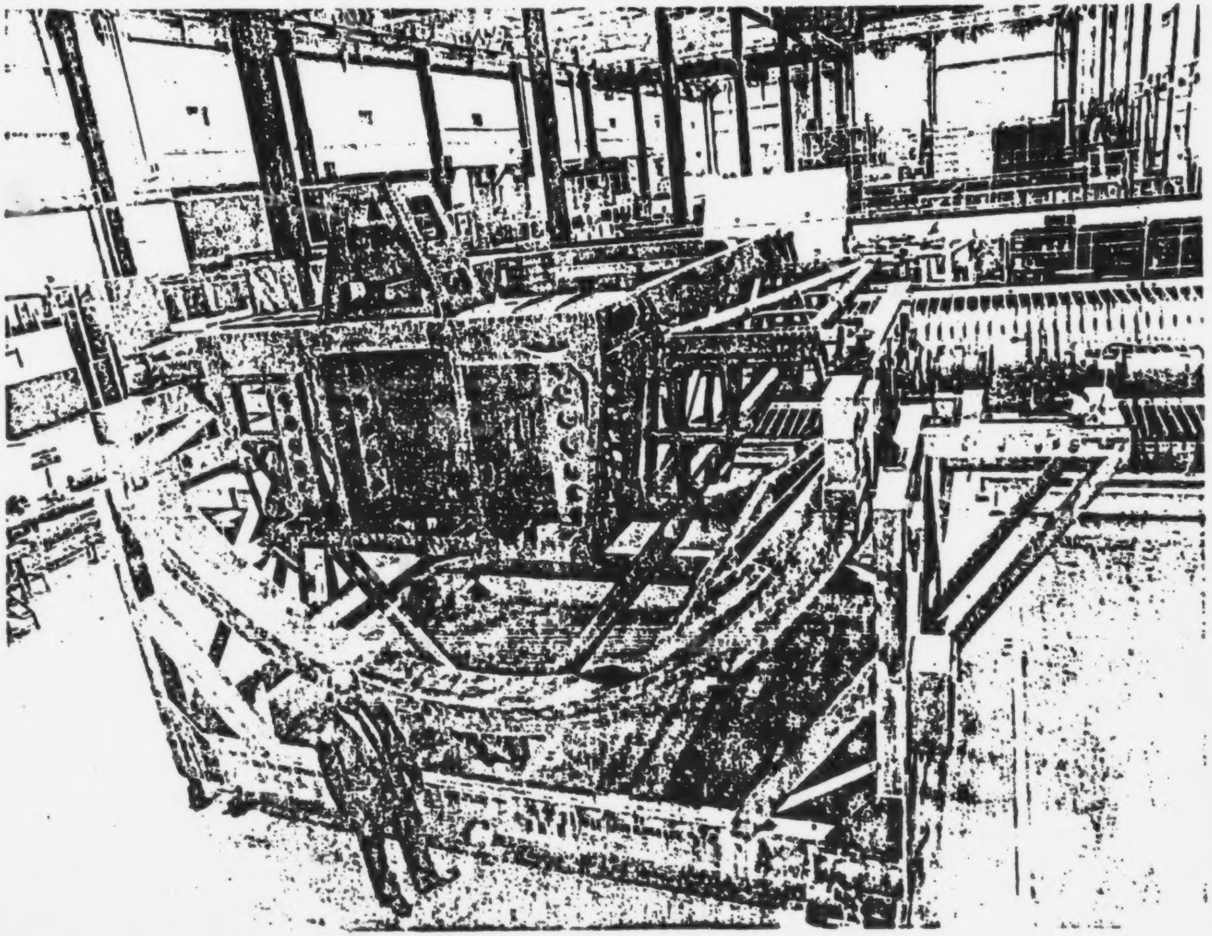

ORIGINAL PAGE IS
OF POOR QUALITY

SFHT TRANSPORTER

THIS EXISTING TRANSPORTER COULD ALSO BE MADE AVAILABLE TO THE SFHT PROGRAM.

IT WAS DESIGNED TO ACCOMODATE A SUPERCRITICAL HELIUM EXPERIMENT.

SFHT

EXISTING TRANSPORTER

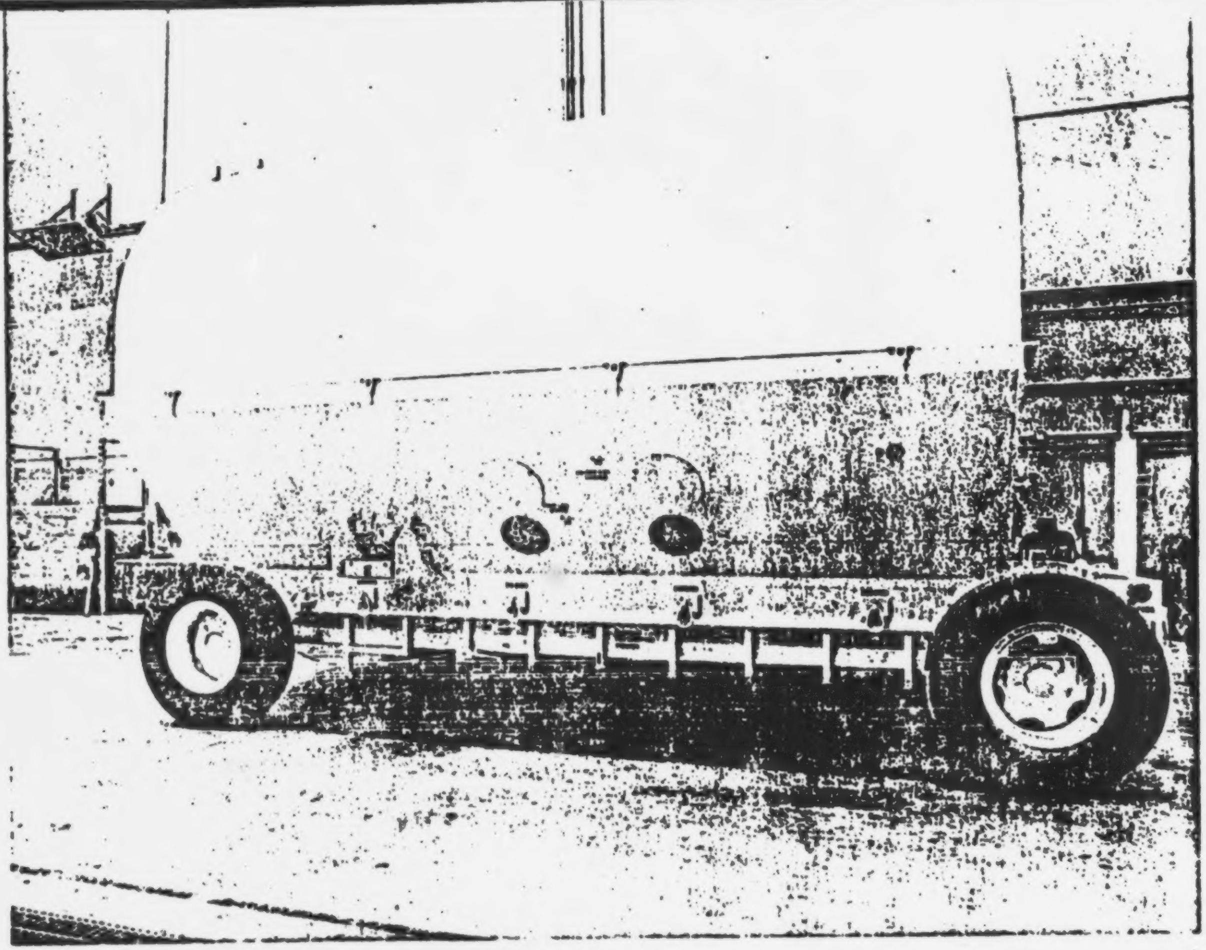

ORIGINAL PAGE IS
OF POOR QUALITY

AVIONICS

AVIONICS

- FROM SOW "... UTILIZE THE AVIONICS SUBSYSTEM DEVELOPED FOR OSCRS UNLESS SIGNIFICANT PENALTIES ARE INCURRED...."
- THREE AVIONICS SUBSYSTEMS WERE EVALUATED
  - ROCKWELL INTERNATIONAL STS
  - MARTIN MARIETTA DRIVER A
  - FAIRCHILD SPACE CO.
- FOUR MAJOR AREAS EXAMINED:
  - REQUIREMENTS
  - OPERATIONS
  - INTERFACES
  - CHANGES REQUIRED FOR SFHT

OSCRS AVIONICS SYSTEM BLOCK DIAGRAM

- THIS ROCKWELL AVIONICS SYSTEM BLOCK DIAGRAM SHOWS THE EXPECTED ORBITER AFD AND PAYLOAD BAY LAYOUT OF THE VARIOUS AVIONICS COMPONENTS. IMPLEMENTATION OF SFHT TO THIS SYSTEM WILL REQUIRE UNIQUE TAILORING TO THE BERTHING, FLUID, CONTROLS AND USER INTERFACES. NO HEATER SYSTEM IS PRESENTLY NEEDED FOR SFHT.

- THE SFHT AVIONICS SUBSYSTEM IS SHOWN IN A LATER SKETCH.

SFHT

AVIONICS SYSTEM BLOCK DIAGRAM
OSCRS

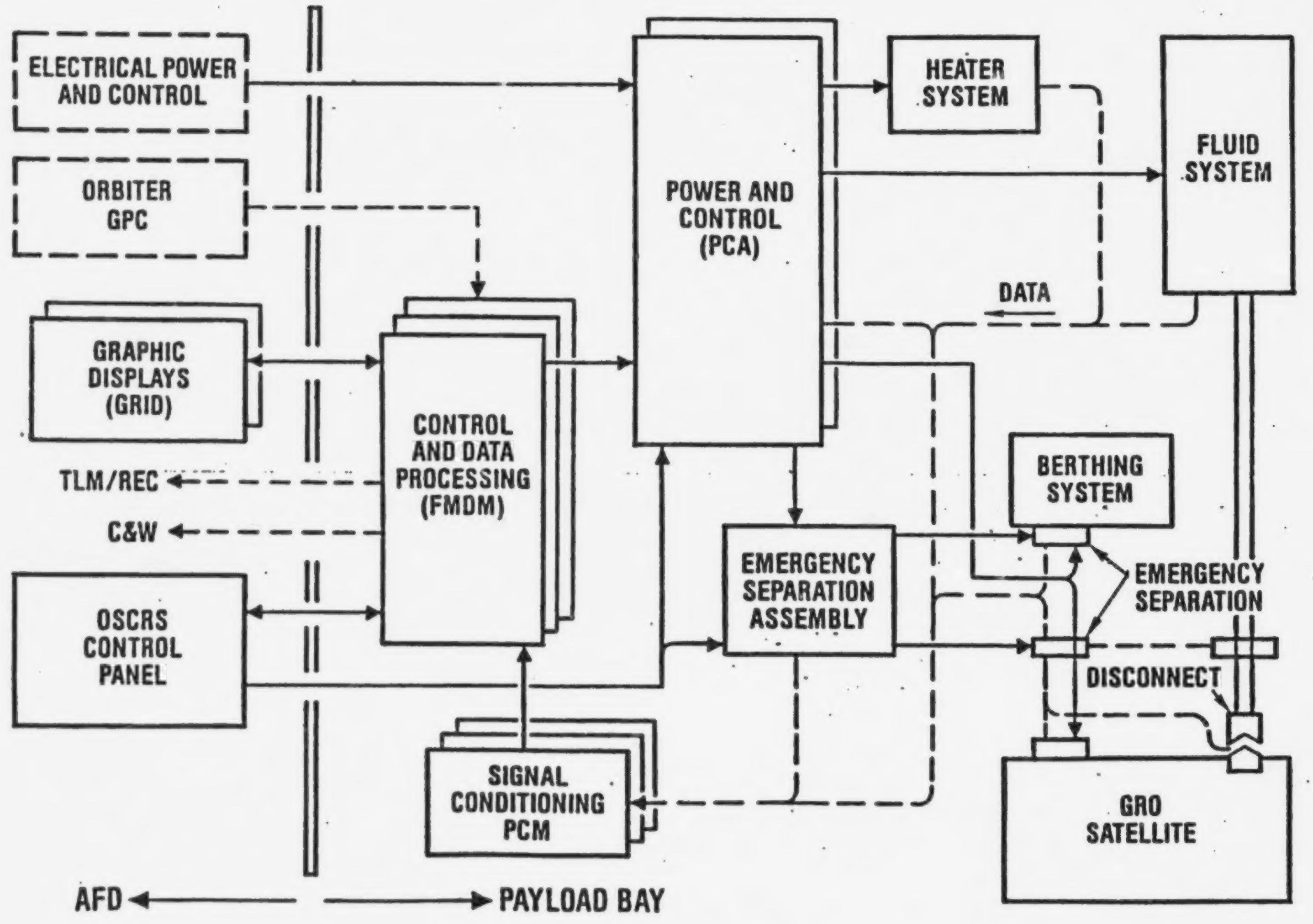

AVIONICS CONTROL CONCEPT

- THIS ROCKWELL BLOCK DIAGRAM SHOWS A MORE DETAILED BREAKDOWN OF THE AVIONICS CONTROL CONCEPT. IT UTILIZES 3 REDUNDANT STRINGS TO SATISFY FAILURE TOLERANCE REQUIREMENTS. IT OPERATES ON A 2-OUT-OF-3 VOTER MODULE SELECTION FOR POWERING THE FLUID SYSTEM. REDUNDANT COMMANDS ASSURE CONTINUOUS OPERATIONS & PROTECTION FROM INADVERTENT COMMANDS IS A FUNCTION OF THE 2-OUT-OF-3 LOGIC. IT RELIES ON SIMILAR TO FLIGHT PROVEN FLEX MULTIPLEXER DEMULTIPLEXER INTEGRATED MICROPROCESSOR CIRCUITRY THAT IS STATE-OF-THE ART AND GROWTH ORIENTED.

AVIONICS CONTROL CONCEPT

ROCKWELL

SFHT

ORIGINAL PAGE IS OF POOR QUALITY

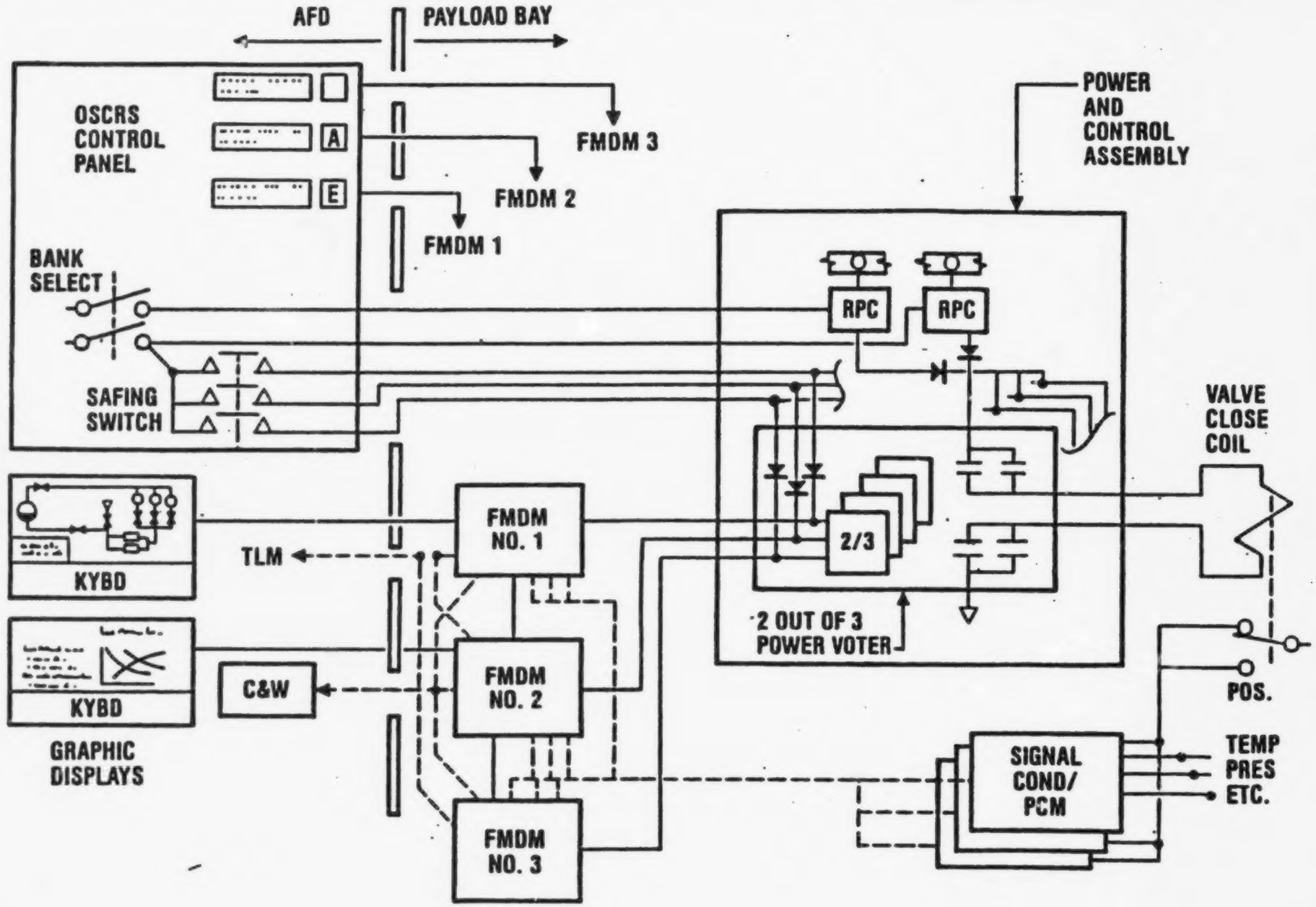

CONTROL AND DATA MANAGEMENT SUBSYSTEM BLOCK DIAGRAM

- THIS MARTIN AVIONICS SUBSYSTEM IS TRIPLE REDUNDANT TO PROVIDE 2-FAULT TOLERANCE PROTECTION. COMMANDS ARE FED TO A MAJORITY VOTE BOX DESIGNED TO PREVENT VALVE ACTUATION IN THE EVENT OF 2 FAILURES. A SAFING SEQUENCER CAN BYPASS THE MICROCOMPUTERS AND SHUT DOWN THE SYSTEM IF 2 OF THE 3 OSCRS MICROCOMPUTERS FAIL. A FLIGHT QUALIFIED SOUTHWEST RESEARCH MICROCOMPUTER IS THE SELECTION FOR THE OSCRS CPU A, B & C. THE AFD MICROCOMPUTERS REMAIN TO BE DEVELOPED. DEPENDING ON THE HOST, THE AFD PORTION MAY NOT BE NEEDED, I.E., FOR SPACE STATION OPERATIONS.

SFHT

CONTROL & DATA MNGNT. BLOCK DIAGRAM - MARTIN

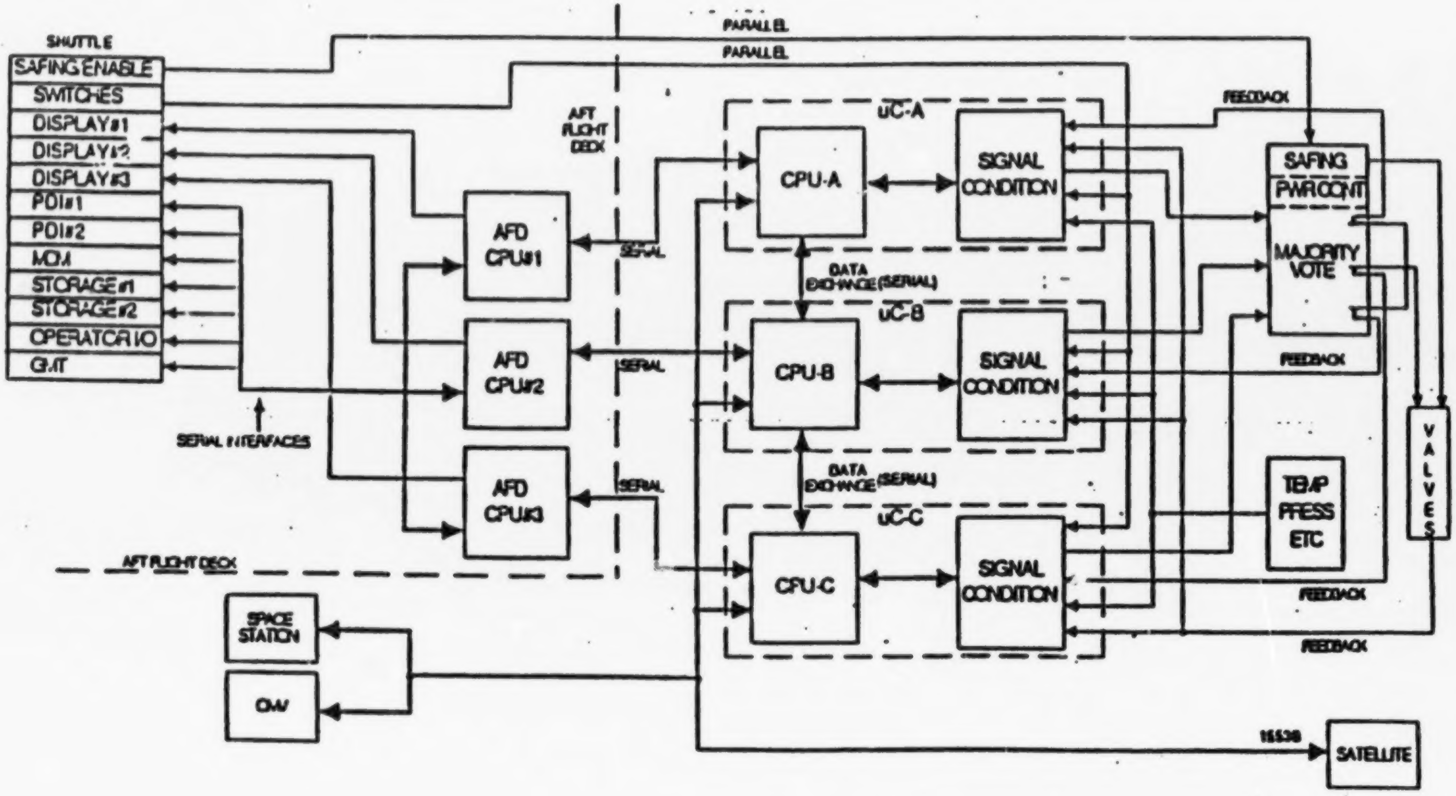

ORIGINAL PAGE IS OF POOR QUALITY

FAIRCHILD AVIONICS

- THIS "MATURE" DESIGN SHOWS ELECTRONIC BOX PHYSICAL LAYOUT. IT IS A FULLY REDUNDANT COMMAND AND TELEMETRY SYSTEM WITH A SINGLE 3RD STRING CALLED BACKUP MONITORING SYSTEM. ITS ADVANCED COMMUNICATIONS & DATA HANDLING (AC & DH) UNITS PERFORM THE MULTIPROCESSOR CONTROL FUNCTIONS. THE REMOTE INTERFACE (RIU) UNITS ARE SPACE QUALIFIED AND INTERFACE COMMANDS & TELEMETRY TO USERS. AN EXPANDER UNIT (EU) IS AVAILABLE TO SUPPLEMENT THE RIUS. CHANGES TO THIS SYSTEM REQUIRE HARDWARE EXAMINATION RATHER THAN CONCEPTUAL EVALUATION.

SFHT

FAIRCHILD AVIONICS

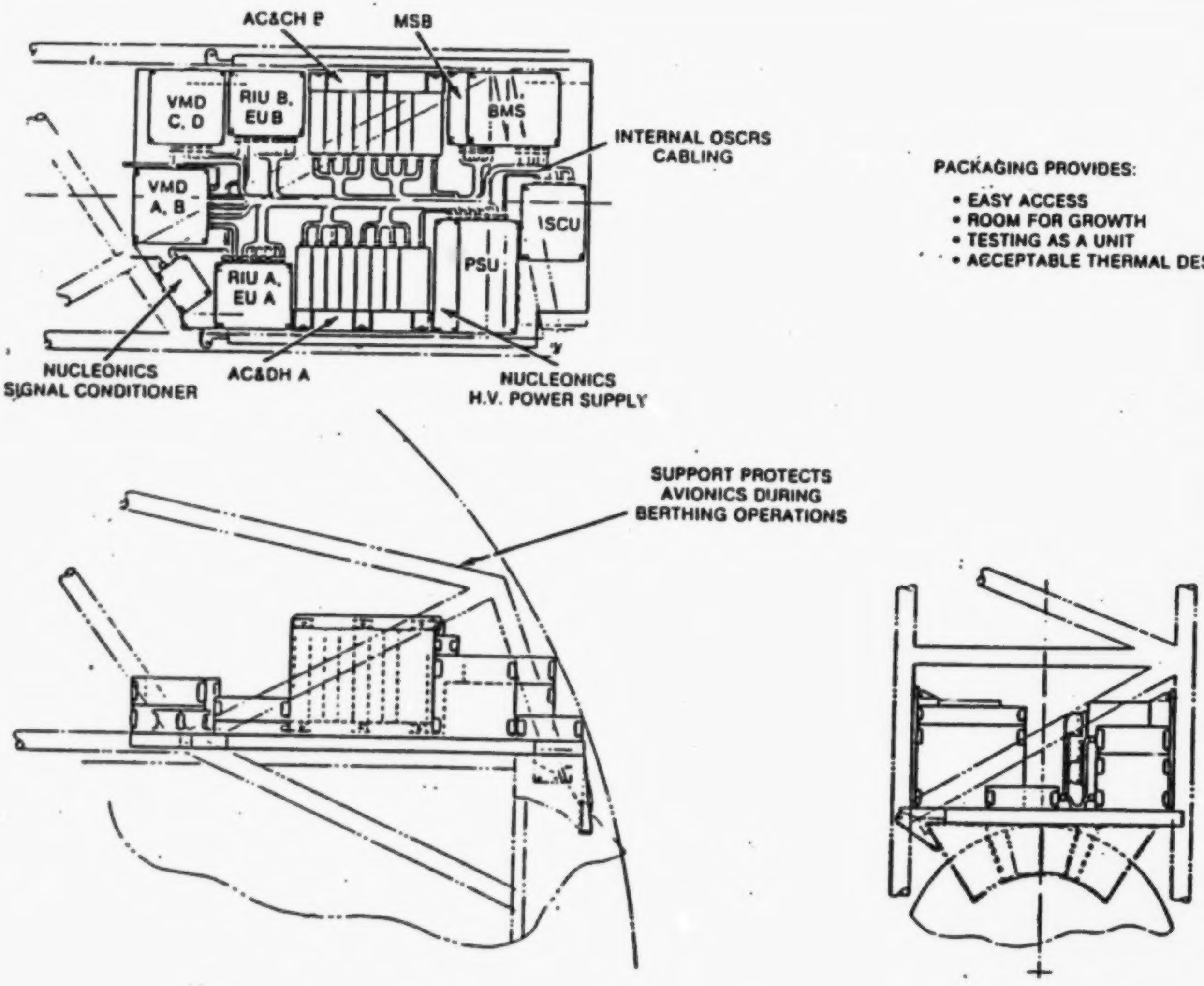

PACKAGING PROVIDES:

- EASY ACCESS
- ROOM FOR GROWTH
- TESTING AS A UNIT
- ACCEPTABLE THERMAL DESIGN

FAIRCHILD AVIONICS CABLING (OSCRS)

- O THIS CABLING DRAWING FOR THE AVIONICS IS REPRESENTATIVE OF A "MATURE" DESIGN. SFHT CHANGES THOUGH CONCEPTUAL IN NATURE MAY REQUIRE BREAKING INTO ESTABLISH HARDWARE WIRING AND CONNECTORS. ROUTING OF SIGNALS, DENSITY OF PINS, EMI RESTRICTIONS AND POWER REDUNDANCY ARE EXAMPLES OF AREAS THAT COULD PROVE AWKWARD TO IMPLEMENT. ON THE OTHER HAND, ESTABLISHED, FLIGHT PROVEN HARDWARE CARRIES WITH IT A HIGH DEGREE OF SUCCESS.
- O CABLING FOR THE OTHER 2 CONTRACTORS IS MAINTAINED AT THE CONCEPTUAL BLOCK DIAGRAM LEVEL.

SFHT

FAIRCHILD AVIONICS CABLING (OSCRS)

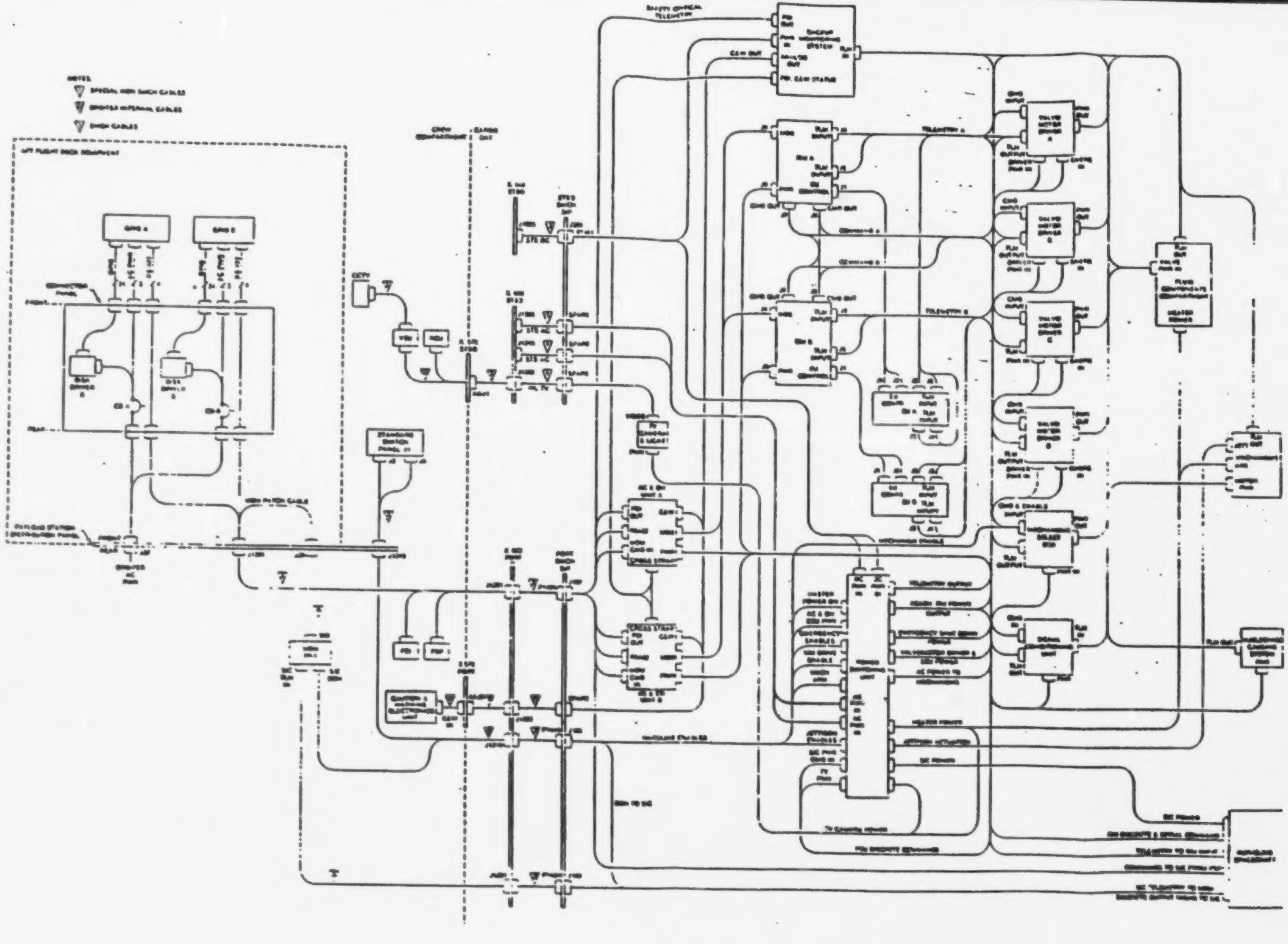

ORIGINAL PAGE IS
OF POOR QUALITY

SFHT SYSTEM BLOCK DIAGRAM

- THE SFHT SYSTEM HAS AVIONICS INTERFACES TO MECHANICAL/STRUCTURES, FLUID AND THERMAL CONTROL SUBSYSTEMS FOR THE FUNCTIONS WITHIN THE BLOCKS.

- IN ADDITION, BOTH USERS AND HOSTS WILL REQUIRE THE SAME AVIONICS BLOCK FUNCTIONAL CONSIDERATIONS.

- GSE FUNCTIONS ARE INCLUDED TO EMPHASIZE THEIR UNIQUENESS FOR GROUND OPERATIONS.

SFHT SYSTEM BLOCK DIAGRAM

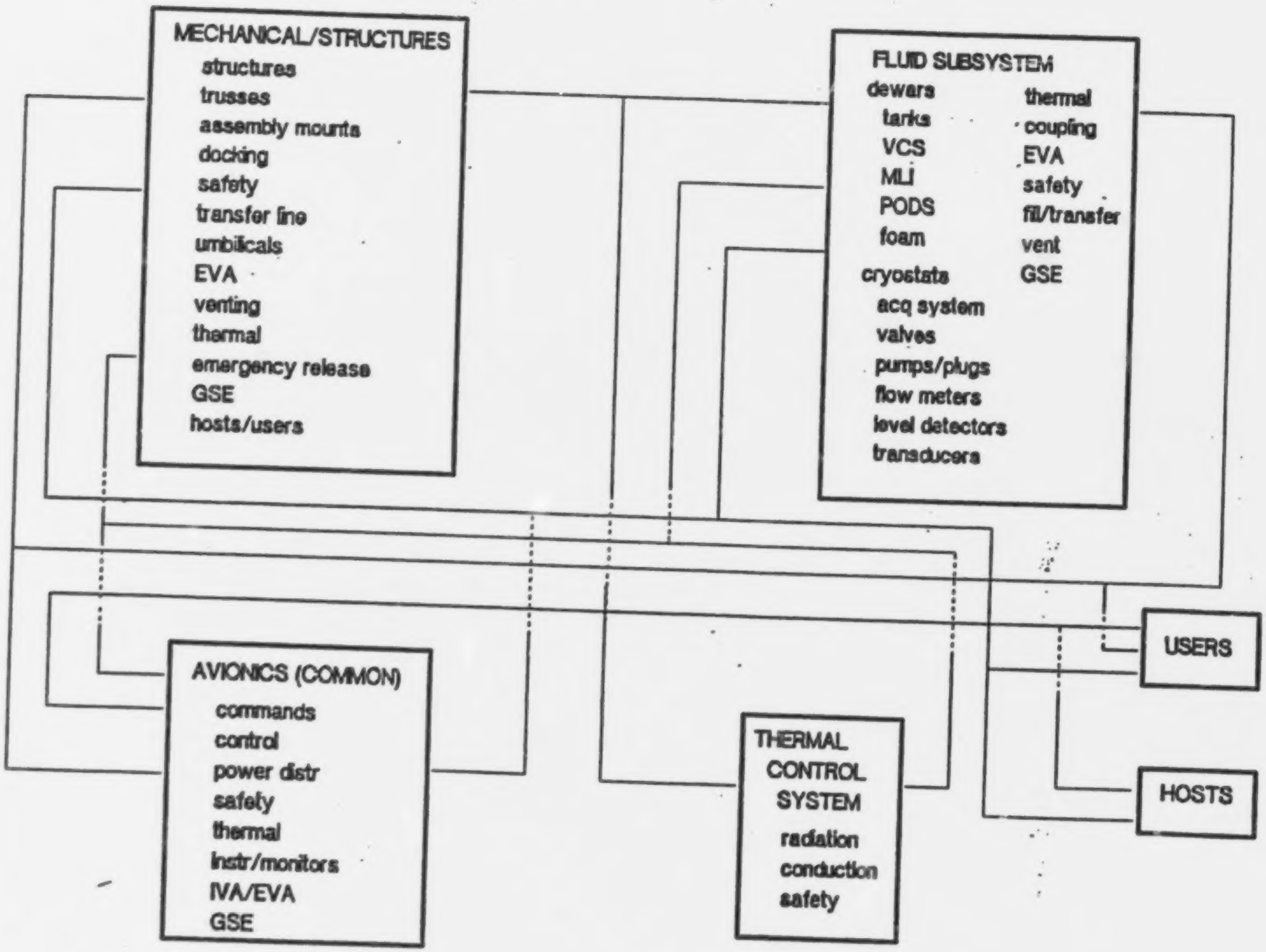

TABLE 1 - AVIONICS REQUIREMENTS SCORING MATRIX

- TABLE 1 IS SFHT'S SCORING MATRIX USED TO TOLERATE THE WEIGHTED SCORES GIVEN TO EACH OF THREE OSCRS AVIONICS CONTRACTORS, ROCKWELL, MARTIN AND FAIRCHILD.

- THE SCORING WAS BASED ON HOW WELL THE OSCRS CANDIDATE COMPLIED WITH SFHT REQUIREMENTS. THE SFHT REQUIREMENTS WERE BASED ON THOSE IN THE SFHT SOW/SRD AVIONICS.

- THE COMPLETELY FILLED IN TABLE, CAN BE FOUND IN SFHT ENGINEERING MEMO NO. 5.

SFHT

TABLE 1 AVIONICS REQUIREMENTS SCORING

Criteria	Weight	Scoring (0 – 10) Rockwell	Martin	Fairchild	Weighted Score Rockwell	Martin	Fairchild	Ideal
I Avionics Subsystem								
– Shall meet Safety requirements	10	10	10	7	100	100	70	100
–Shall meet all requirements without Orbiter GPC	10	8	9	7	80	90	70	100
– Shall incorporate growth provisions	10	9	9	7	90	90	70	100
II Design Requirements				subtotal	270	280	210	300
a. Control & Monitoring								
1. Two–failure tolerant HW & SW in prevent. Inadvertant command of valves or safety critical components on either SFHT and User spacecraft	10	8	7	5	80	70	50	100
2. Min. 2 crew operations before hazardous valve operation								
3. 2–failure tolerant cmd valves req to safe SFHT & User s/c								
4. 1–failure tolerant min. cmd valves to accomplish resupply								
5. Command valves in User s/c and SFHT								
6. Operate & monitor SFHT on ground and in–orbit								
7. Provide Caution & Warning of SFHT & User for safe oper.								
8. –independent of GPC,2–failure tolerant min. of safety critical data/annunciation to crew								
9. –crew can override & change limits								
10. Command control & monitor – berthing								
11. –emergency sepsration								
12 –operation of automatic interface								
13. 2–failure tolerant detect & control safety crit. temp & press								
14. Crew control from System Control Station (SCS)								
b. Operations, Power & Maintenance								
1. Provide elect. I/F between SFHT,User s/c and carrier (Orbiter, Space Station, OMV & ELV) per JSC 21000–IDD–STD Sec 7								
2. Min. 2–failure tolerant for power to SFHT and User s/c and derive power from a 2–failure tolerant source								

SFHT

TABLE 1 AVIONICS REQUIREMENTS SCORING CONT.

Criteria	Weight	Scoring (0 – 10) Rockwell	Martin	Fairchild	Weighted Score Rockwell	Martin	Fairchild	Ideal
3. Provide power to User spacecraft								
4. Safe use in presende of cryogens (operate with gnd spill)								
5. Power switches for major Avionics elements								
6. Wire harnesses with indexed connectors at each component for ease in hardware changeout								
7. Short lead time software changes + certification/development at contractor;facilities indpt of other subsystems								
				subtotal				
c. Data								
1. Downlink capability of SFHT and User spacecraft								
2. Storage capability of fluid transfer data when real time downlink not possible/undesireable								
3. Graphic display of SFHT & User s/c data indpt of GPC								
4. Signal conditioning of SFHT & User spacecraft								
5. Minimum 2-failure tolerant in providing SFHT/User s/c system data for safe operation & control of fluid transfer								
6. Instrumentation required for operation & monitoring								
				subtotal				
d. Ground Servicing								
1. Subsystem and dedicaterl GSE shall permit servicing on the ground monitor & record data indpt of ground and/or Orbiter facilities								
2. Subsystem shall be capable of operation and check-out without Orbiter facilities								
				subtotal				

AVIONICS CONT.

- O SFHT DERIVED REQUIREMENTS BASED ON DEWAR/CRYOSTAT DEVICE PARAMETERS
  - O TEMPERATURES - COLD VALVES, GAUGES, TRANSFER LINES, HARNESSES
  - O PRESSURES - TANKS, GAUGES, SAFETY
  - O VENTING - LO, HI, EMERGENCY
  - O INSTRUMENTATION - meters, thermal oscillation (TAO's)
  - o SAFETY - RUPTURE, LEAK, SHUTOFF, PYRO, GROUND, HOST, USER
  - O INTERFACES - USER VALVING DESIGN CONTROLS, MONITORING, SAFETY, COST
  - O COMMUNICATIONS - EVA, AFD, USER, POCC, TDRSS, HOST
  - O C&W - RUPTURE
  - O EVA - SAFETY HAZARDS PERIMETER, TRANSFER LINE, COUPLER, TOUCH TEMP
  - O IVA - TRANSFER OPS - TEMPS, C&W, GPC
  - O GSE - FILL, C&W, AVIONICS

TABLE 2 - WEIGHTED & NORMALIZED TOTALS AVIONICS SCORING

- TABLE 2 IS A SUMMARY OF THE SCORING FROM TABLE 1. THERE WERE 3 CATEGORIES OF CRITERIA EVALUATED AND SCORED. AN "IDEAL" SCORING COLUMN IS INCLUDED AND NORMALIZED TOTALS INDICATE THAT MARTIN AND ROCKWELL ALMOST HAD EQUAL TOTALS AS OPPOSED TO FAIRCHILD.

- NOTE: COSTS OF THE AVIONICS SUBSYSTEMS WERE NOT A PART OF EVALUATION CRITERIA.

Criteria	Rockwell	Martin	Fairchild	Ideal
I Avionics subsystem	270	280	210	300
II Design Requirements	2163	2150	1807	2640
III Design Features	144	163	86	190
Weighted totals	2577	2593	2103	3130
Percent Normalized totals	82.3	82.8	67.1	100

SFHT

AVIONICS CONT.

- O OPERATIONS
  - O BASED ON SAFETY REQUIREMENTS DISCUSSED
  - O ONE CONTRACTOR LEANS HEAVY ON 3 STRING MAJORITY VOTE DECISIONING OR IMPLEMENTING SAFETY CIRCUITRY
  - O INSTRUMENTATION, BASICALLY SIMILAR IN NUMBER AND COMPLEXITY
    - NO COMPRESSOR, HEATERS
  - O A TYPICAL OPERATIONAL SEQUENCE HEAVILY DEPENDENT ON MODULAR SOFTWARE
    - O A SECOND CONTRACTOR SHOWED A MATURE SYSTEM
  - O CAUTION AND WARNING NECESSARILY INVOLVES GPC LIMITED USE
  - O DISPLAYS FROM 2 CONTRACTORS SHOW
    - O SCHEMATIC OF FLUID SUBSYSTEM, A PLASMA DISPLAY AND A TOGGED SWITCH CONTROL PANEL
  - O OR A COLOR VERSION, STATE-OF-ART MORE VERSATILE BUT DEVELOPMENTAL

NOMINAL OPERATING SEQUENCE

- THIS ROCKWELL OPERATING SEQUENCE REPRESENTS A SOFTWARE FLOW DIAGRAM FOR THE OSCRS AVIONICS FOR AN ON-ORBIT OPERATION. IT INCLUDES DISPLAYS SEEN AT THE AFD STANDARD SWITCH PANEL ALONG WITH THE KEYBOARD INPUT POINTS. THE ARM AND EXEC FUNCTIONS ARE HIGHLIGHTED TO INDICATE THE ARMING OF AND EXECUTION CONTROLS.

SFHT

NOMINAL OPERATING SEQUENCE

ROCKWELL

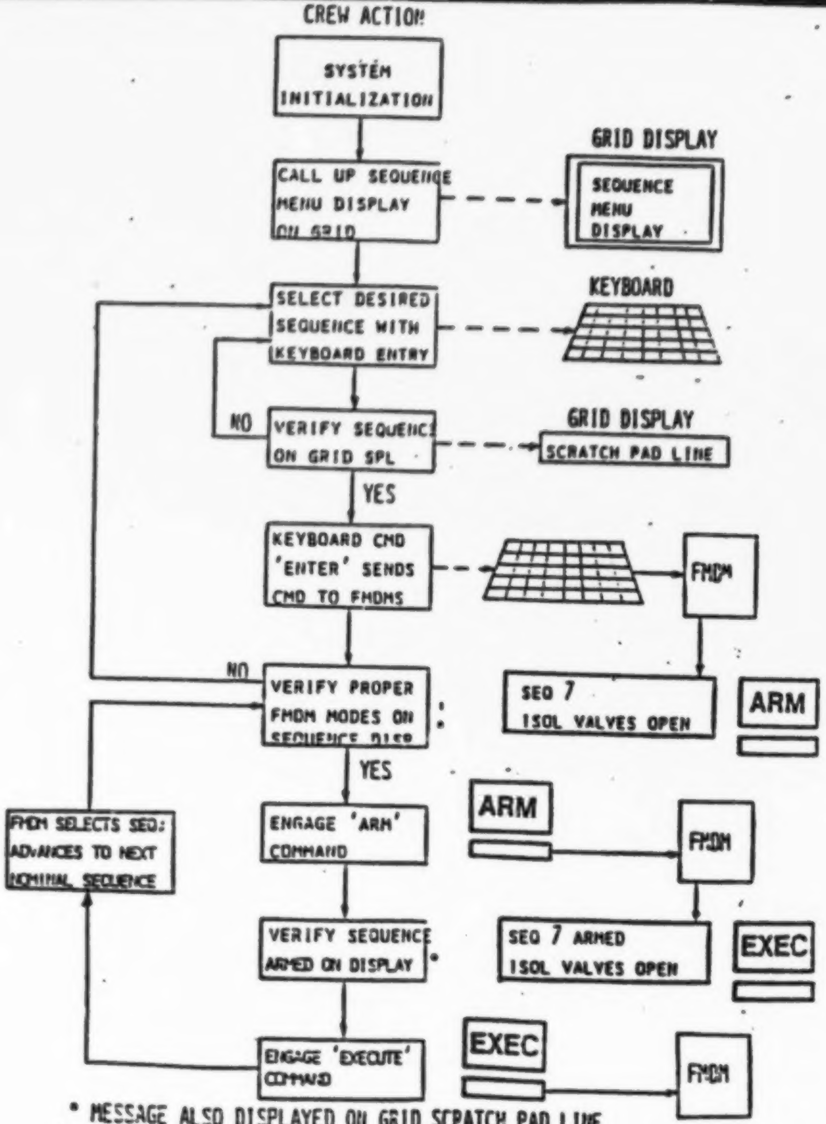

* MESSAGE ALSO DISPLAYED ON GRID SCPATCH PAD LINE

** CREW MAY SELECT ANY SEQUENCE DISPLAYED ON SEQ MENU DISPLAY

SOFTWARE SYSTEM OVERVIEW

- o THIS MARTIN SOFTWARE SYSTEM OVERVIEW ILLUSTRATES THE PROCEDURAL FLOW AND CONTROL OF SOFTWARE GENERATED FOR THE 3 PHASES OF FLIGHT OPERATIONS.

- o THIS SYSTEM DOES <u>NOT</u> UTILIZE THE GRID COMPUTER HARDWARE, AS OPPOSED TO THE OTHER 2 CONTRACTORS WHO DO.

SFHT

SOFTWARE SYSTEMS OVERVIEW

MARTIN

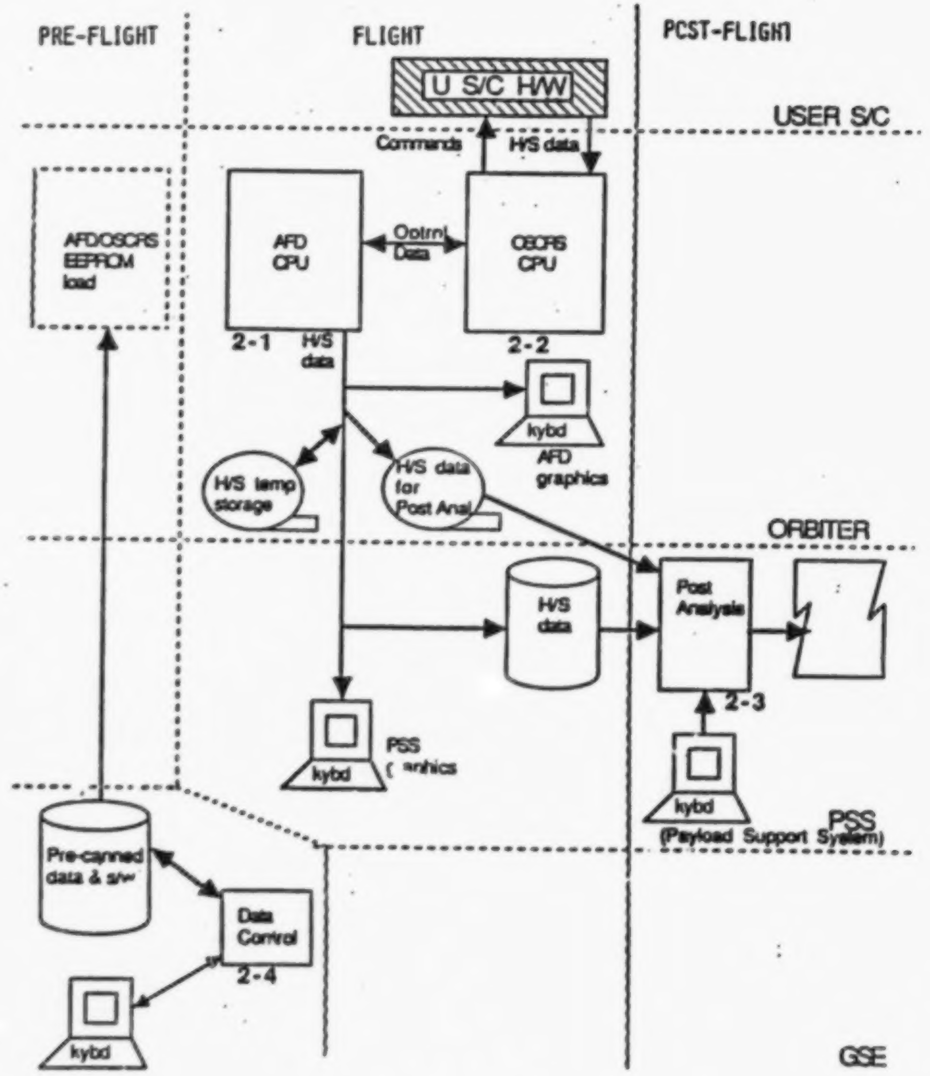

MONOPROPELLANT INSTRUMENTATION SUMMARY

- THIS ROCKWELL INSTRUMENTATION SUMMARIZES THE TOTAL INSTRUMENTATION ITEMS NEEDED FOR AN OSCRS MONOPROPELLANT SYSTEM.
- LESS THE HEATERS AND COMPRESSORS AND INCREASING THE SATELLITE (USERS) COUNT, IT IS COMPARABLE TO WHAT CAN BE EXPECTED FOR THE SFHT INSTRUMENTATION.

SFHT

MONO INSTRUMENTATION SUMMARY - ROCKWELL

ITEM	MONOPROPELLANT BASIC	MONOPROPELLANT BASIC GROWTH
Pressures	50	62
Temperatures	87	101
Flow	2	2
Valves	55	87
Position	220	348
Current	14	14
Relay Position	35	35
Voltage Status	36	36
Current Status		
Heaters	7	7
Satellite	3	3
Compressors	-	-
Motor Status	4	4
Level Sensors	2	2
Emergency Disconnect	4	4

OSCRS CAUTION AND WARNING

- THE ROCKWELL AVIONICS ACCOUNTS FOR BOTH ANNUNCIATORS AND VISUAL INDICATORS FOR THEIR CAUTION & WARNING FUNCTIONS, AS SHOWN. THEY UTILIZE STANDARD ORBITER INTERFACES AND MAKE USE OF THE ORBITER'S GENERAL PURPOSE COMPUTER AS DO THE OTHER 2 CONTRACTORS.

OSCRS CAUTION & WARNING

ROCKWELL

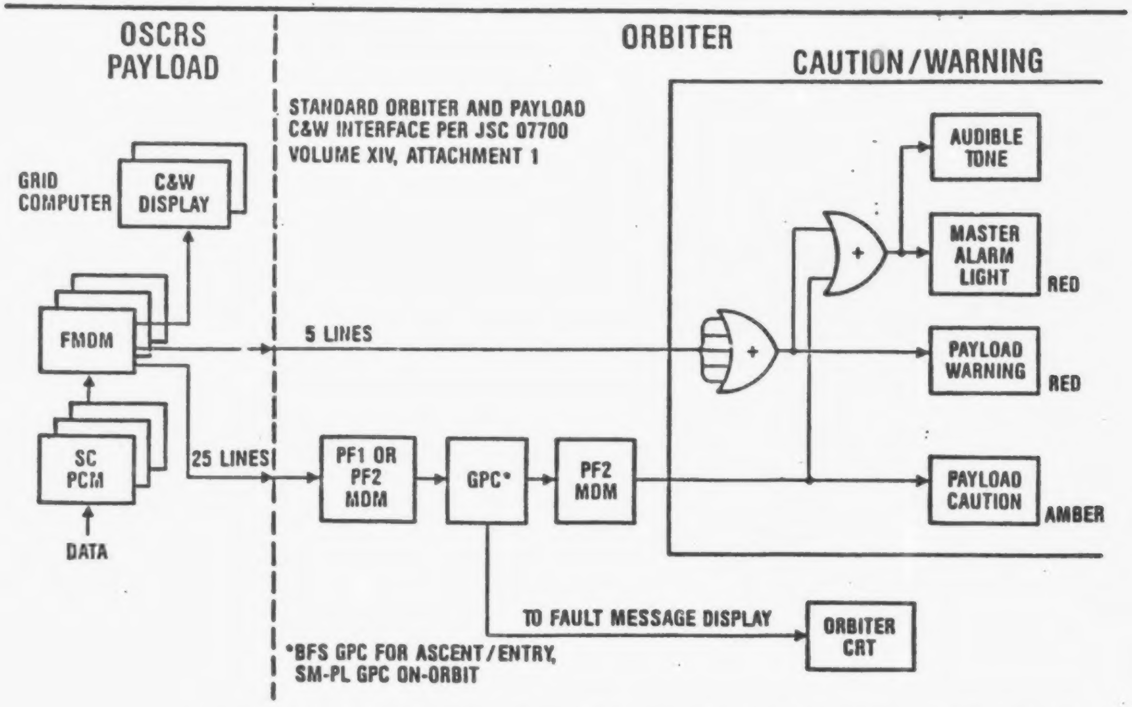

- ORBITER PROVIDES C&W FUNCTION DURING ALL MISSION PHASES (INCLUDING ASCENT AND ENTRY)
- DURING RESUPPLY OPERATIONS, OSCRS AVIONICS IS USED TO PROVIDE TWO FAILURE TOLERANT C/W CAPABILITY VIA THE GRID DISPLAYS

<u>EMERGENCY SEPARATION</u>

- THIS ROCKWELL EMERGENCY SEPARATION SUMMARIZES THE OSCRS REQUIREMENTS, CONCEPT AND NUMBER OF CIRCUITS REQUIRED FOR A PARTICULAR USER. IT IS NOT UNLIKE WHAT CAN BE EXPECTED FOR AN SFHT EMERGENCY SEPARATION CONCEPT.

- IT CALLS OUT THE JSC SPACE SHUTTLE PYROTECHNIC SPECIFICATION, THE NASA STANDARD INITIATORS AND PYRO INITIATOR CONTROLLERS JSC REQUIREMENT.

SFHT EMERGENCY SEPARATION –ROCKWELL

REQUIREMENT:

- o PROVIDE CAPABILITY FOR EMERGENCY SEPARATION OF RECEIVING SATELLITE FROM TANKER MODULE, WITHOUT EVA.
- o JSC 08060 SPACE SHUTTLE PYROTECHNIC SPEC.

CONCEPT:

- o REDUNDANT PYROTECHNIC DEVICES TO SEPARATE:
  - o PROPELLANT DISCONNECTS
  - o ELECTRICAL CABLES
  - o BERTHING LATCHES
- o CREW ACTIVATED ARM AND FIRE SWITCHES FOR EACH PYRO CIRCUIT
- o NASA STANDARD INITIATOR (NSI) AND PYRO INITIATOR CONTROLLER (PIC) FOR EACH PYRO CIRCUIT, PER JSC 08060

NUMBER OF PYRO CIRCUITS: o

	GRO	GROWTH
PROPELLANT DISC	4	16
ELECT DISC	2	2
BERTHING LATCHES	6	6

OSCRS PYROTECHNIC CIRCUIT

- THIS MARTIN OSCRS PYROTECHNIC CIRCUIT ILLUSTRATES ANOTHER COMMON FUNCTION THT MAY BE APPLICABLE TO SFHT. IT IS PART OF THE AVIONICS SUBSYSTEM.

SFHT

OSCRS PYROTECHNIC CIRCUIT

MARTIN

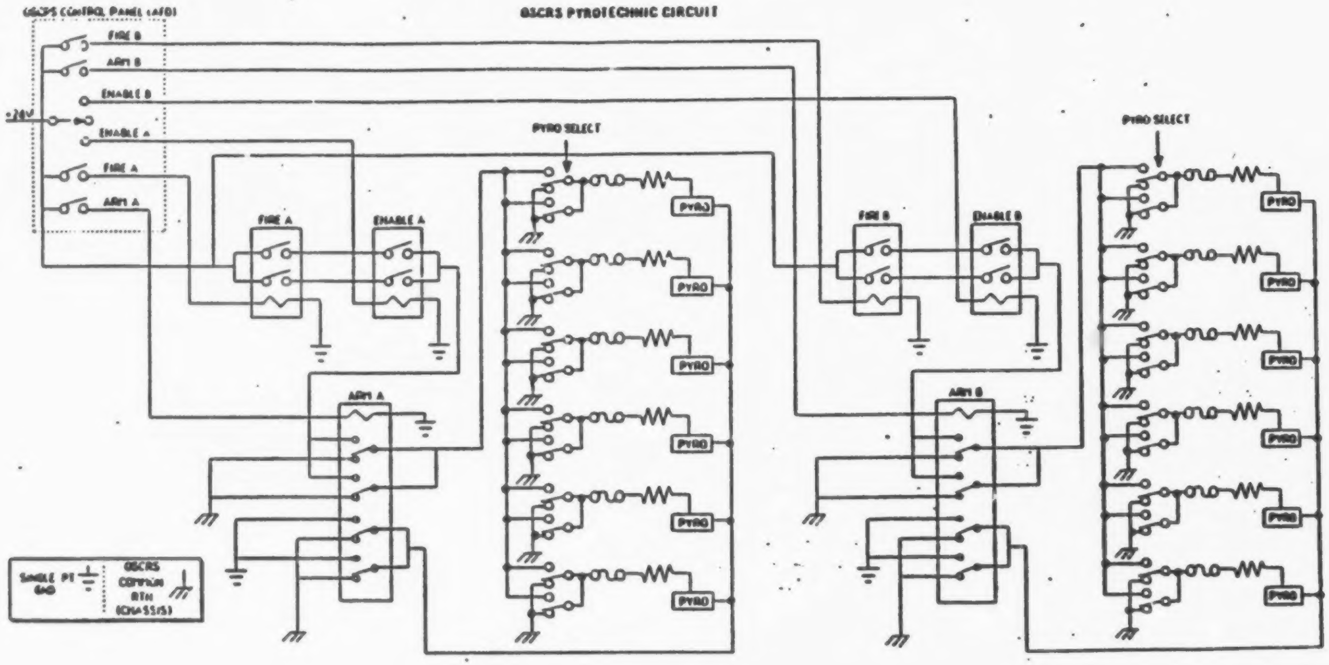

GRID COMPUTER AND GRAPHIC DISPLAY EXAMPLE

- THE NEXT 3 FIGURES ILLUSTRATE THE OSCRS GRAPHIC DISPLAYS, THE FIRST IS ROCKWELL'S USE OF THE GRID COMPUTER TO DISPLAY THE FLUID SYSTEM SCHEMATIC AND ITS ASSOCIATED TOGGLE SWITCH CONTROL PANEL (SECOND FIGURE). THE THIRD FIGURE IS A PLASMA TYPE SCREEN AND A STATE-OF-THE ART CONTROLS PANEL THAT CAN SWING (HINGED) ABOVE THE AFD STANDARD SWITCH PANEL; IT IS MORE "USER FRIENDLY" BUT IS DEVELOPMENTAL.

- INTERFACE OF 3 CONTRACTORS MUST BE COMPATIBLE WITH SFHT
- AFD LAYOUT FOR SFHT WILL RESEMBLE OSCRS AND SFHT AND MUST CONSIDER THOSE STANDARD MIXED CARGO HARNESS INTERFACES

- CONSIDERATIONS OF USER INTERFACES BY CONTRACTOR
  - PORTIONS OF AVIONICS MAY NEED EXPANSION/DELETION FOR SPACE STATION
  - FOR OMV, NOT ALL 12 DESIGN REFERENCE MISSIONS APPLY AND FOR DETAIL USE FURTHER EXAMINATION REQUIRED, POWER AND CONTROL AS 2 ITEMS

SFHT

GRID COMPUTER & GRAPHICS DISPLAY EXAMPLE - ROCKWELL

Grid Computer

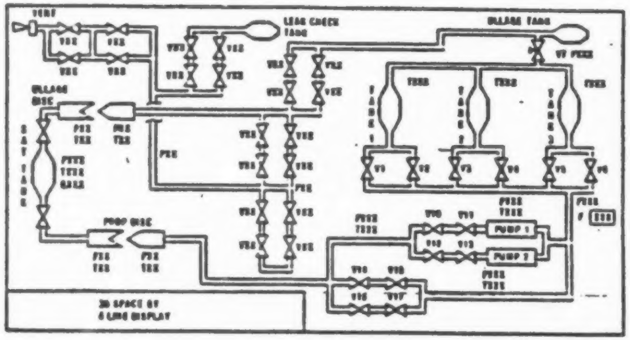

- FLUID SYSTEM SCHEMATIC
- 4 IN. x 8 IN. ELECTROLUMINESCENT SCREEN
  - 64 PIXELS PER INCH

OSCRS CONTROL PANEL
ROCKWELL

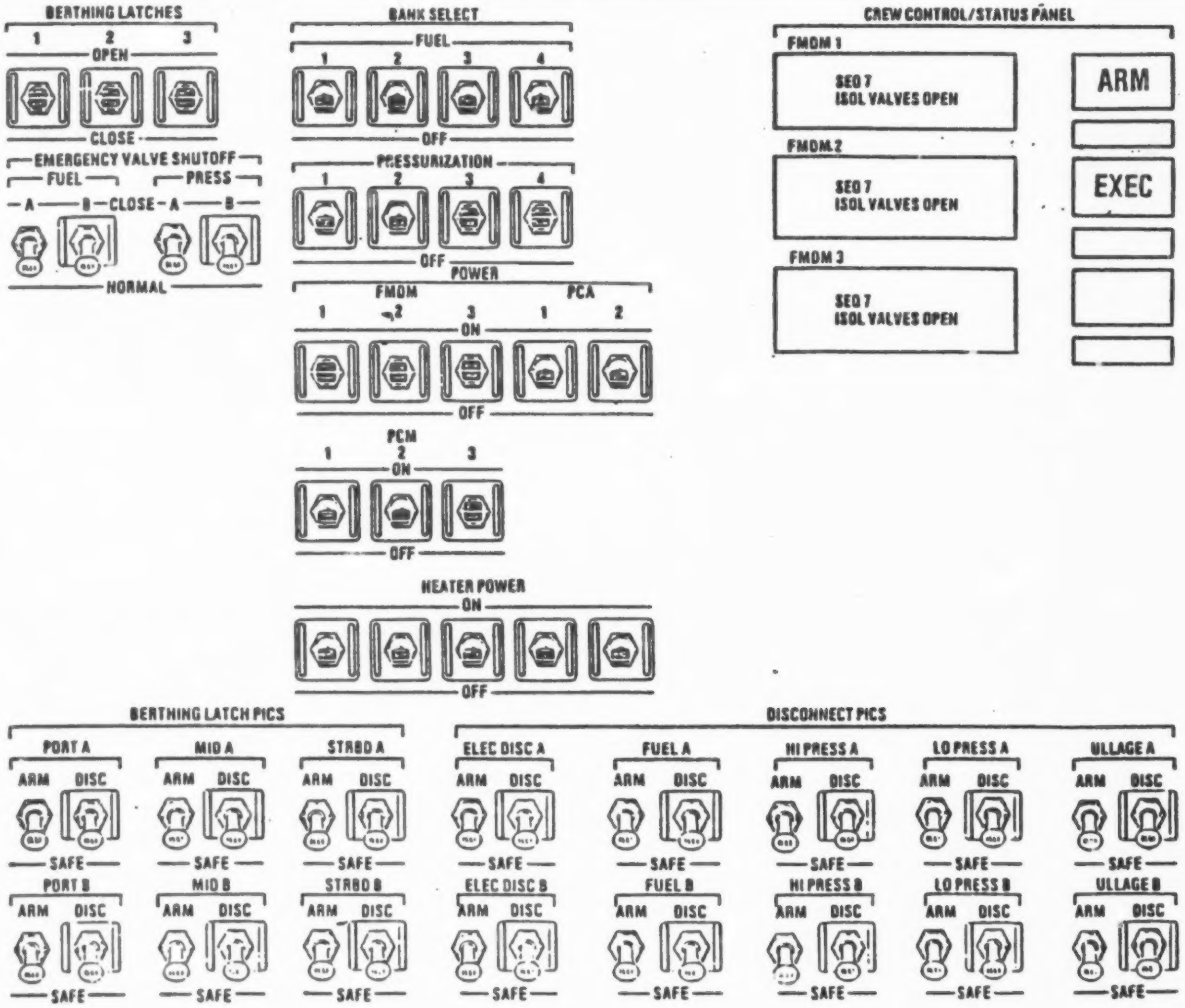

ORIGINAL PAGE IS
OF POOR QUALITY

SFHT OSCRS CONTROL PANEL (PRELIMINARY)

MARTIN

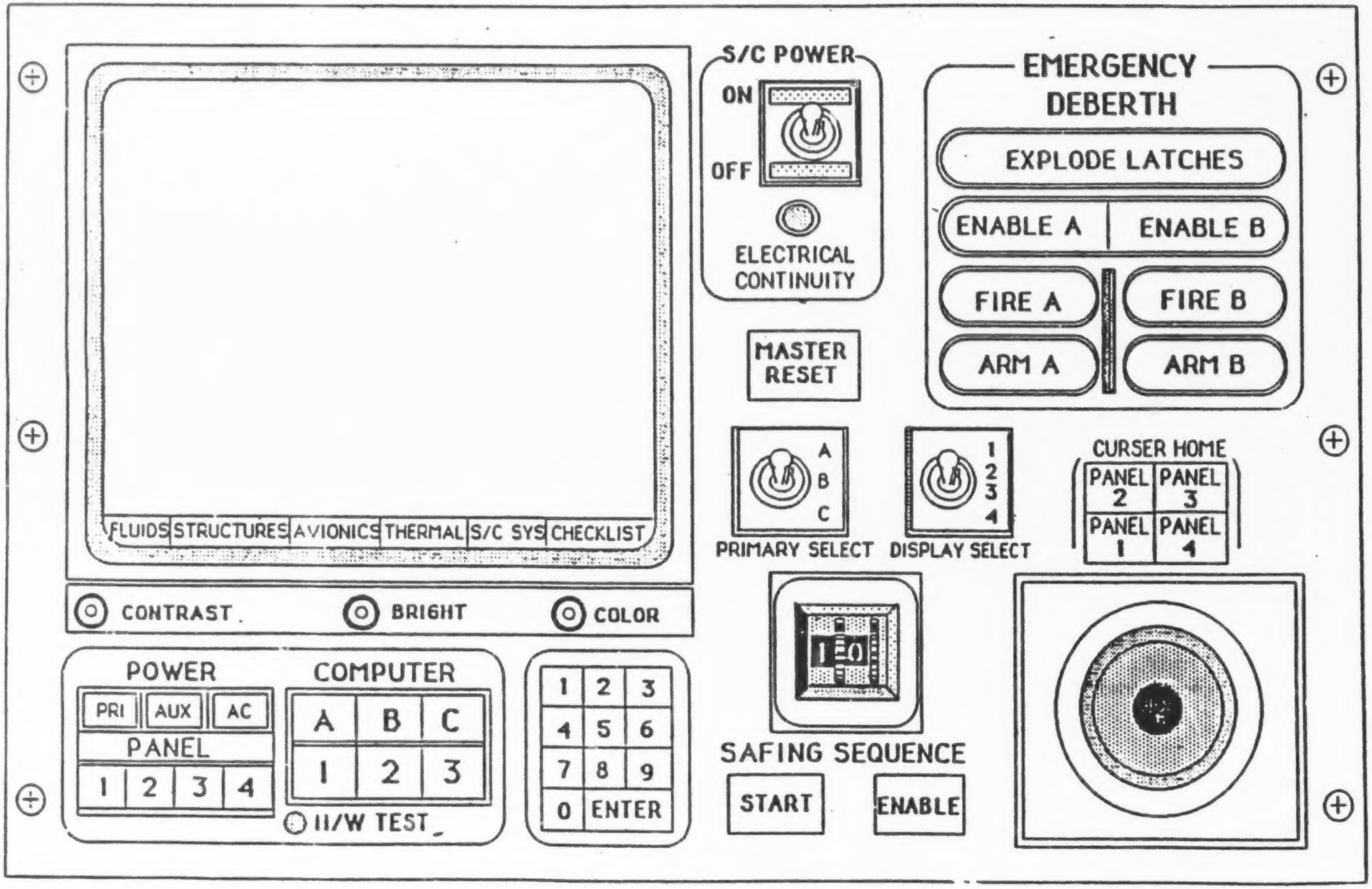

SFHT AVIONICS LAYOUT

- THIS SKETCH ILLUSTRATES A MORE DETAILED LAYOUT OF AN EXPECTED SFHT AVIONICS ELECTRONIC BOX LAYOUT. ONE SFHT STRING WOULD CONSIST OF AN EXPANSION CHASSIS, A CENTRAL PROCESSING UNIT, A MAJORITY VOTE BOX AND AN ASSOCIATED INTERFACE UNIT.

- THE SYSTEM IS "TRIPLY REDUNDANT", I.E., THERE ARE 3 IDENTICAL STRINGS.

- THE MECHANISM SELECT BOX CONTAINS THE NECESSARY FUNCTIONS FOR CONTROL OF FSS DOCKING.

- BOTH THE PORT AND STARBOARD SIDES ARE USED AND LOCTIONS ARE SHOWN IN FIGURES OF THE STRUCTURAL SECTION.

- AN ADDITIONAL OPTION EXISTS WHEREBY GROWTH IS ACCOMMODATED BY AN ORU TRIANGULAR "ROOF" ARRANGEMENT. (SEE STRUCTURE EM)

SFHT AVIONICS LAYOUT

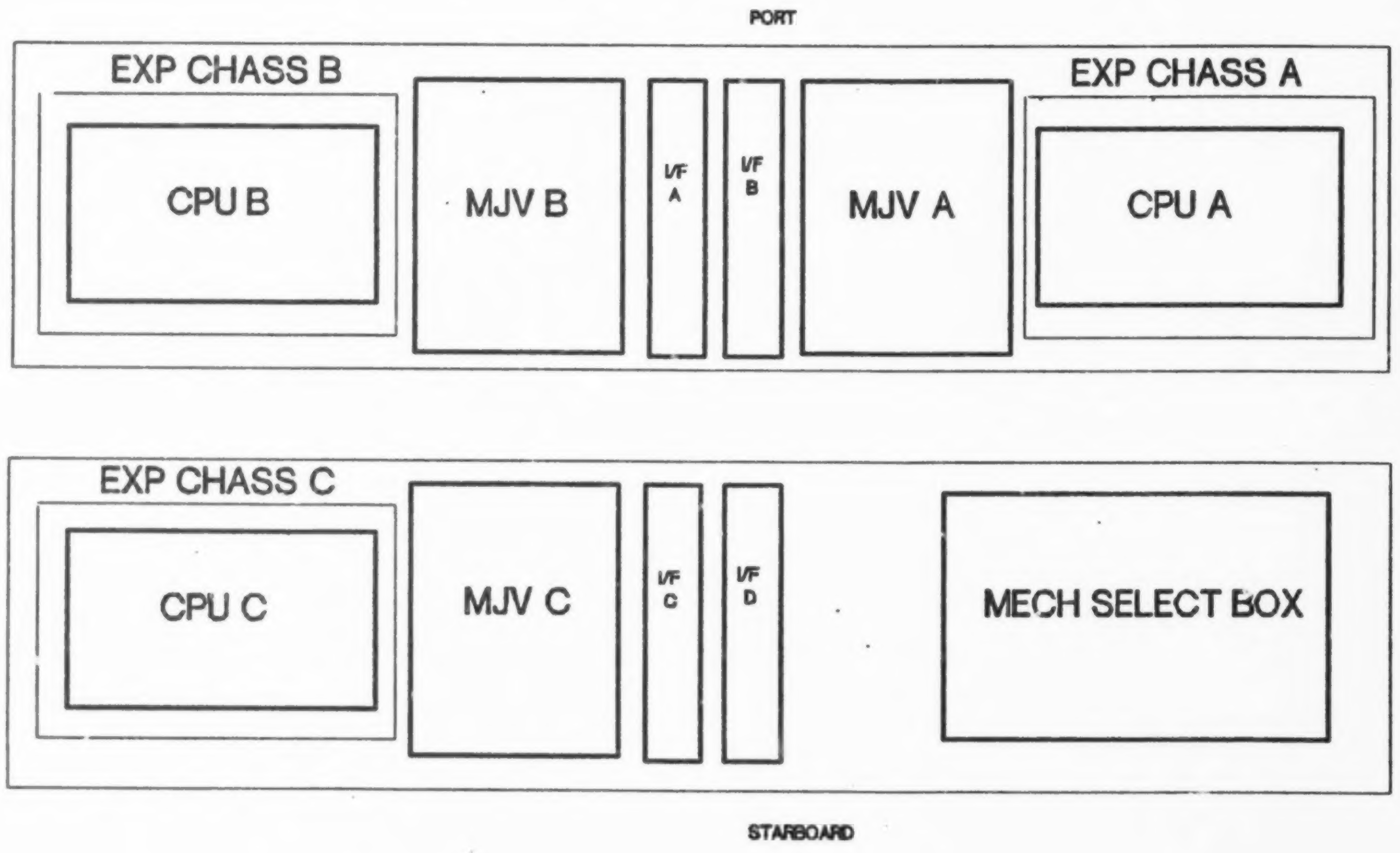

ORBITER INTERFACES LAYOUT OF AFD TO SUPPORT OSCRS OPERATIONS

o A STANDARD VIEW OF THE ORBITER AFT FLIGHT DECK IS SHOWN TO ILLUSTRATE THE GENERAL AREAS WHERE SFHT CONTROLS ARE TO BE HOUSED AND OPERATED ON. IN PARTICULAR, THE OSCRS CONTROL PANEL AND THE GRID COMPUTER PLACEMENT ARE WHERE CREW MEMBERS ARE TO PERFORM SFHT OPERTIONS.

SFHT ORBITER AFT FLIGHT DECK

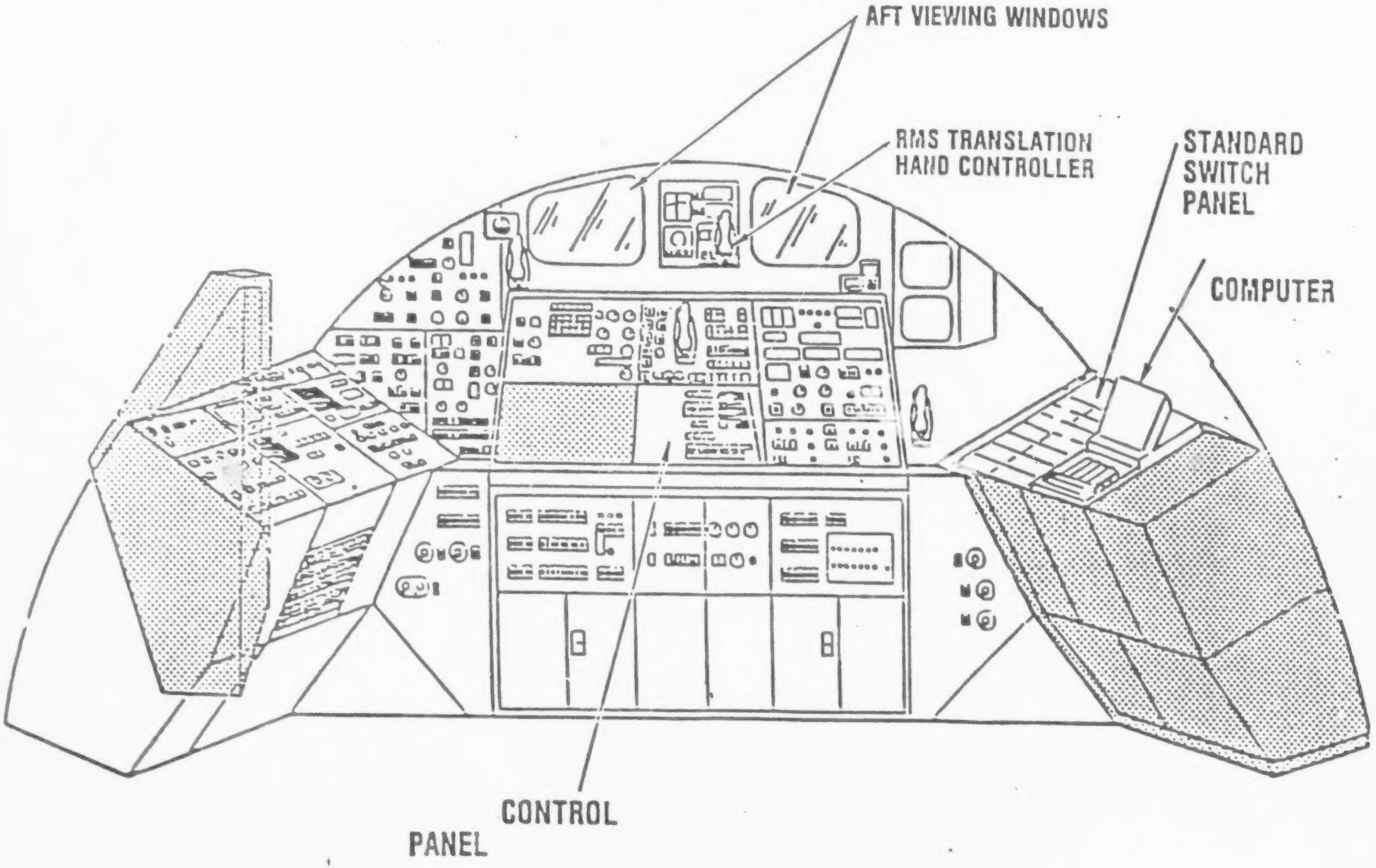

ORIGINAL PAGE IS OF POOR QUALITY

SFHT TO ORBITER AVIONICS INTERFACES

O THIS FIGURE SHOWS INTERFACING BETWEEN THE ORBITER AFD, ITS CARGO BAY AND A SIP THAT ROUTES AVIONICS FUNCTIONS THROUGH THE SFHT TO A USER FREE FLYER, IN THIS CASE AXAF. THE COMMONALITY COMPUTERS THEN MATE TO THE XRS (USER) UMBILICAL OF AXAF. COMMUNICATIONS IS MAINTAINED BETWEEN THE AVIONICS AFD PAYLOAD INTERROGATOR AND THE LOW GAIN ANTENNA OF AXAF ON A TBD LINK.

SFHT

SFHT TO ORBITER AVIONICS INTERFACES

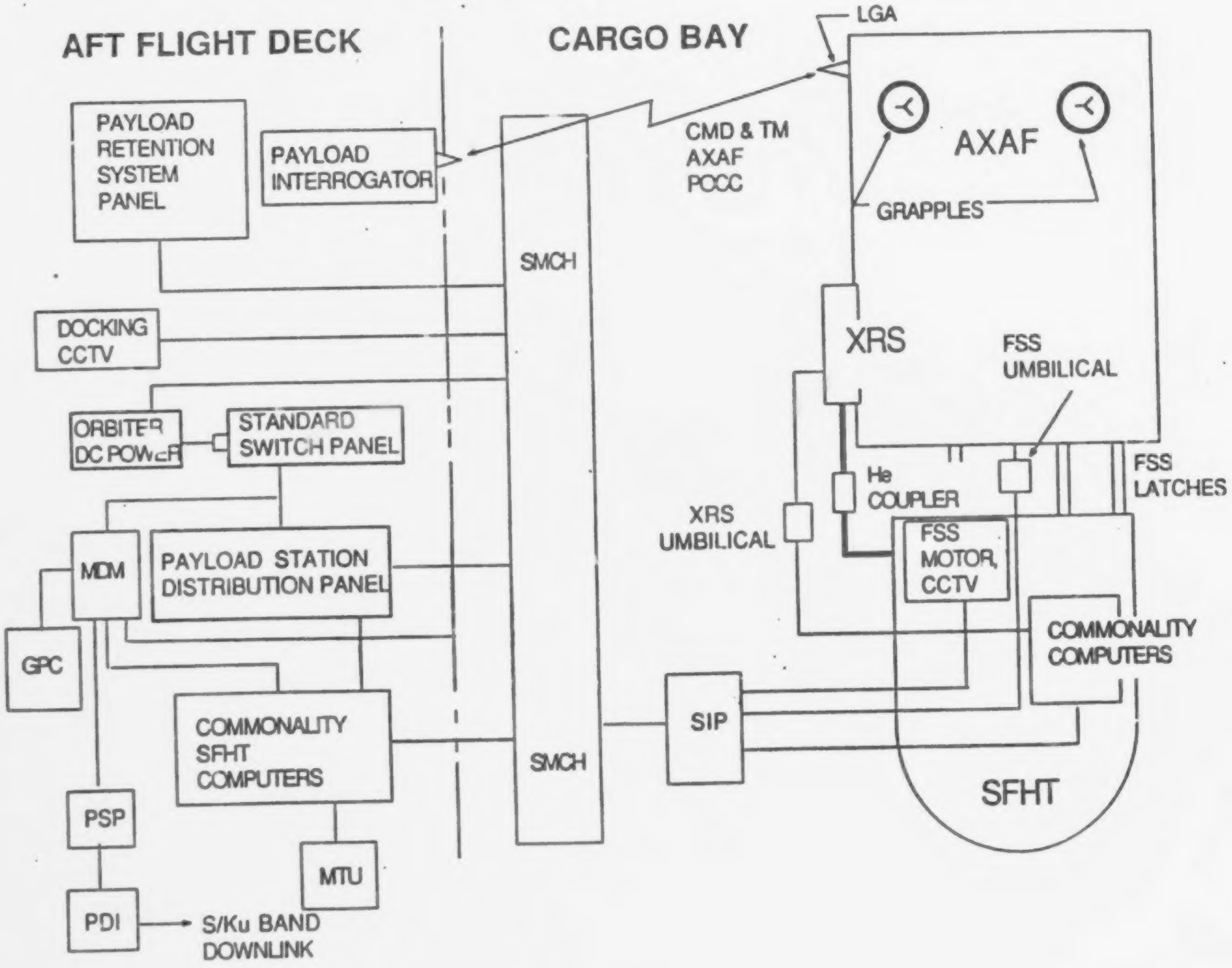

GENERAL AVIONICS INTERFACE TO USERS

- THIS FAIRCHILD BLOCK DIAGRAM SHOWS EXAMPLES OF AVIONICS INTERFACES BETWEEN OSCRS/ORBITER, OSCR/OMV/SPACECRAFT AND OSCRS/SPACE STATION. THESE ARE REPRESENTATIVE OF THE GENERAL FUNCTIONS TO BE EXPECTED. A MORE DETAILED EXAMINATION IS ILLUSTRATED IN THE INTERFACES DISCUSSION.

OSCRS INTERFACE
SS & OMV – FAIRCHILD

ORIGINAL PAGE IS
OF POOR QUALITY

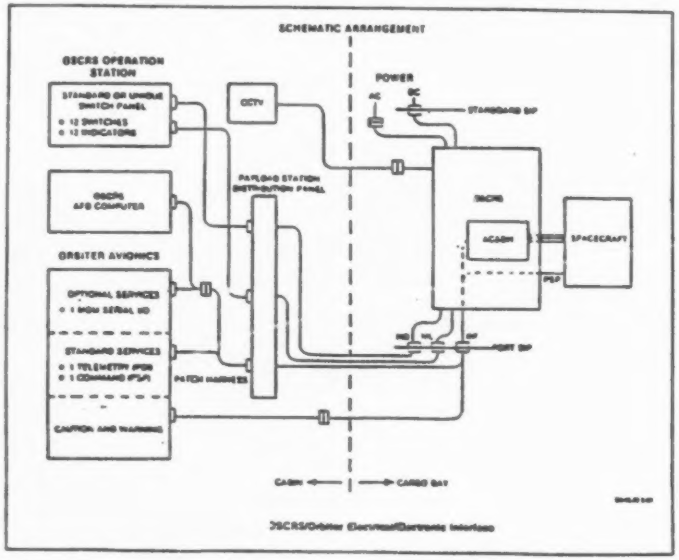

OSCRS/Orbiter Electrical/Electronic Interface

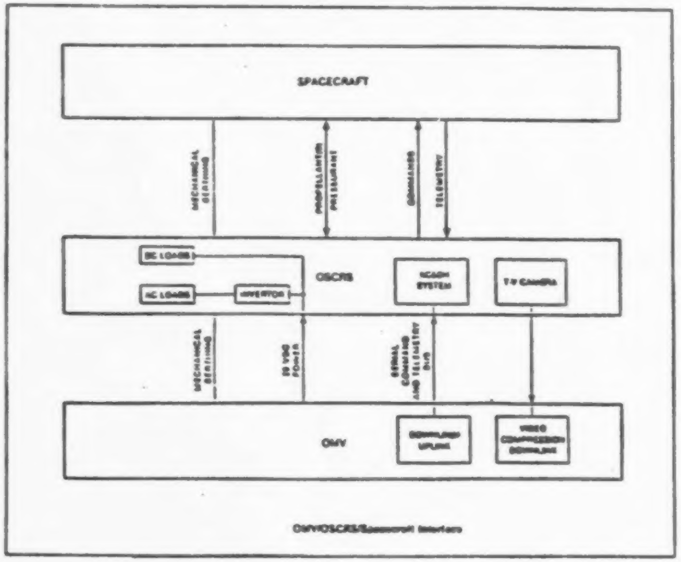

OMV/OSCRS/Spacecraft Interface

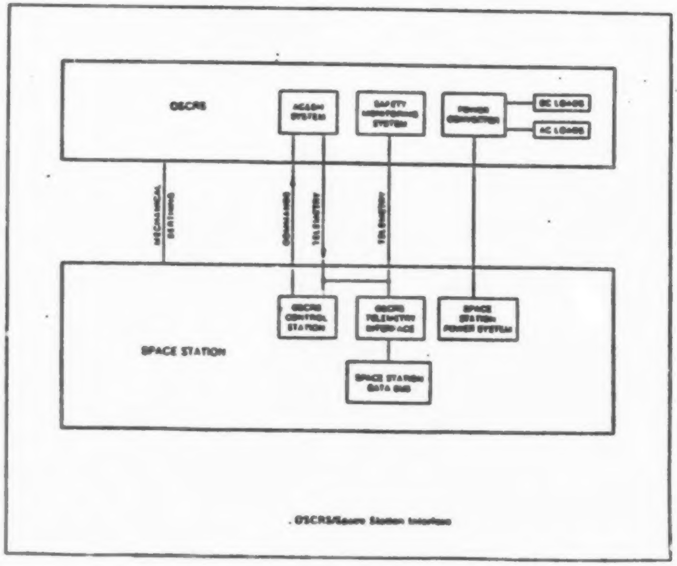

OSCRS/Space Station Interface

SFHT

AVIONICS CONT.

- O CHANGES WILL BE REQUIRED OF THE OSCRS AVIONICS TO MEET SFHT REQUIREMENTS
- O THE COLD VALVES FCR SFHT WILL REQUIRE MULTIPHASE MOTOR DRIVE ELECTRONICS (SHOOT) CONTROLS FOR 7 FUNCTIONS
  - O OPERATION STEMS FROM 16 BIT COMMAND REQUIRING A 14 4-PHASE STEPPER MOTOR DRIVER SYSTEM THAT MUST BE IMPLEMENTED IN ONE OF THE OSCRS CONCEPTS
- O THIS EXAMPLE REPRESENTS PART OF AN ANALYSIS THAT WILL BE FOLLOWED IN ORDER TO IMPLEMENT THE COMMON AVIONICS TO SFHT
- O SELECTION, THOUGH NOT FINAL, REQUIRES CONSIDERATION OF COSTS
- O TOTALS IN MATRIX SHOW MARTIN AND ROCKWELL NEARLY EQUAL IN SCORING WITH FAIRCHILD THIRD

EXAMPLE: 4 PHASE MOTOR DRIVEN VALVE REQUIREMENT

- THE OSCRS AVIONICS WILL NEED TO UNDERGO SOME CHANGES IN ORDER TO ACCOMMODATE SFHT REQUIREMENTS.
- THIS FIGURE ILLUSTRATES AN SFHT REQUIREMENT FOR HE II COLD VALVES THAT MUST BE "TRANSFERRED" TO OSCRS AVIONICS.
- GIVEN A SYSTEM REQUIREMENT TO OPERATE A NUMBER OF FOUR PHASE STEPPER MOTORS THAT OPEN AND CLOSE A NUMBER OF COLD (& WARM) VALVES, A 16 BIT COMMAND FORMAT WITH FUNCTIONAL AND STATUSING OPERATIONS IS NEEDED.
- CIRCUITRY LOGIC COULD RESEMBLE THAT SHOWN FOR THE 4 PHASE MOTOR DRIVEN VALVES ELECTRONICS SYSTEM.

SFHT EXAMPLE: AVIONICS REQUIREMENTS

4-PHASE MOTOR DRIVEN VALVES ELECTRONICS SYSTEM

SYSTEM REQUIREMENTS:

OPERATE 14 4-PHASE STEPPER MOTORS WHICH OPEN AND CLOSE THE FOLLOWING VALVES:

CRYOSTAT #1		CRYOSTAT #2	
1A	VENT BYPASS (COLD)	2A	VENT BYPASS (COLD)
1B	TRANSFER LINE (COLD)	2B	TRANSFER LINE (COLD)
1C	RED. TRANSFER LINE (COLD)	2C	RED. TRANSFER LINE (COLD)
1D	PUMP BYPASS (COLD)	2D	PUMP BYPASS (COLD)
1E	HIGH VENT LINE (COLD)	2E	HIGH VENT LINE (COLD)
1F	DEWAR BYPASS (COLD)	2F	DEWAR BYPASS (COLD)
1G	BAYONET VENT (WARM)	2G	BAYONET VENT (WARM)

SYSTEM OPERATION:

- SELECT 1 OF 14 STEPPER MOTORS
- PROVIDE 4-PHASE DRIVE SIGNAL TO OPERATE SELECTED MOTOR (OPEN OR CLOSE VALVE)
- VERIFY COMMANDED VALVE OPERATION AND PROVIDE CONTINUOUS POSITION MONITORING
- PROVIDE PER-PHASE CURRENT LIMITING (DUTY CYCLE MODULATION, INDEPENDENT OF OP. TEMP.)
- PROVIDE INTERNAL LIMIT FUNCTIONS AND OPERATIONAL HOUSEKEEPING:

TERMINATE VALVE OPERATION, RESET SYSTEM, AND FLAG TLM WHEN:

(1) OVERCURRENT SENSED IN MOTOR COMMON
(2) VALVE OPERATION EXCEEDS TIMER LIMIT
(3) STOP COMMAND RECEIVED DURING A VALVE OPERATION
(4) MICROSWITCHES INDICATE SUCCESSFUL OPERATION COMPLETE

4-PHASE MOTOR DRIVEN VALVES ELECTRONICS CMD/TLM BIT ASSIGNMENTS

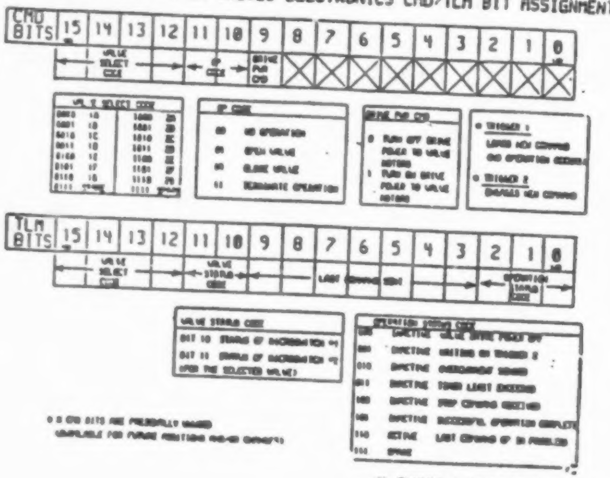

4-PHASE MOTOR DRIVEN VALVES ELECTRONICS SYSTEM

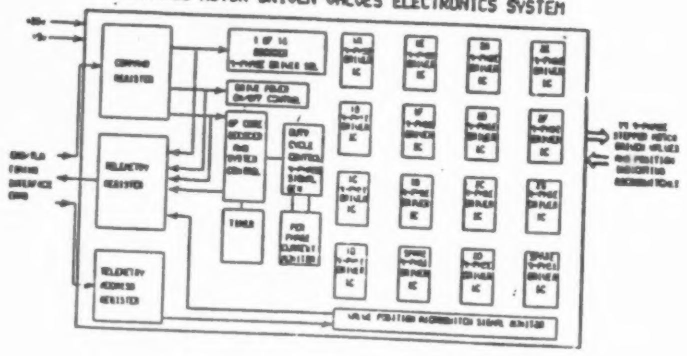

ORIGINAL PAGE IS
OF POOR QUALITY

EXAMPLE: CIRCUITRY TO BE MODIFIED

- o THIS FIGURE SHOWS THE 3 CONTRACTOR AVIONICS SECTIONS THAT MUST BE MODIFIED TO INCORPORATE THE HE II COLD VALVES USED IN SFHT.
- o THE CIRCUITRY IN THE UPPER LEFT CORNER IS FROM THE ROCKWELL AVIONICS.
- o THE UPPER RIGHT CORNER IS FROM THE MARTIN AVIONICS.
- o AND THE LOWER LEFT CORNER IS THE FAIRCHILD CIRCUITRY.
- o IT APPEARS MUCH EASIER TO IMPLEMENT THE HARDWARE COLD VALVE EXAMPLE (FROM SHOOT) IN THE CONCEPTUAL BLOCKS OF ROCKWELL OR MARTIN THAN IN THE MATURE DESIGN OF FAIRCHILD.

SFHT OSCRS AVIONICS - TO BE MODIFIED

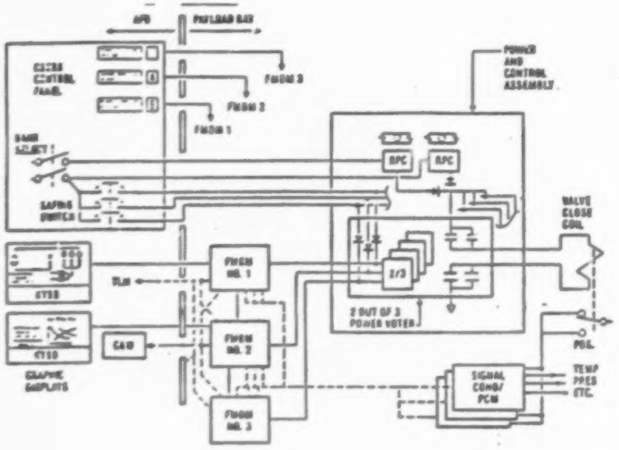

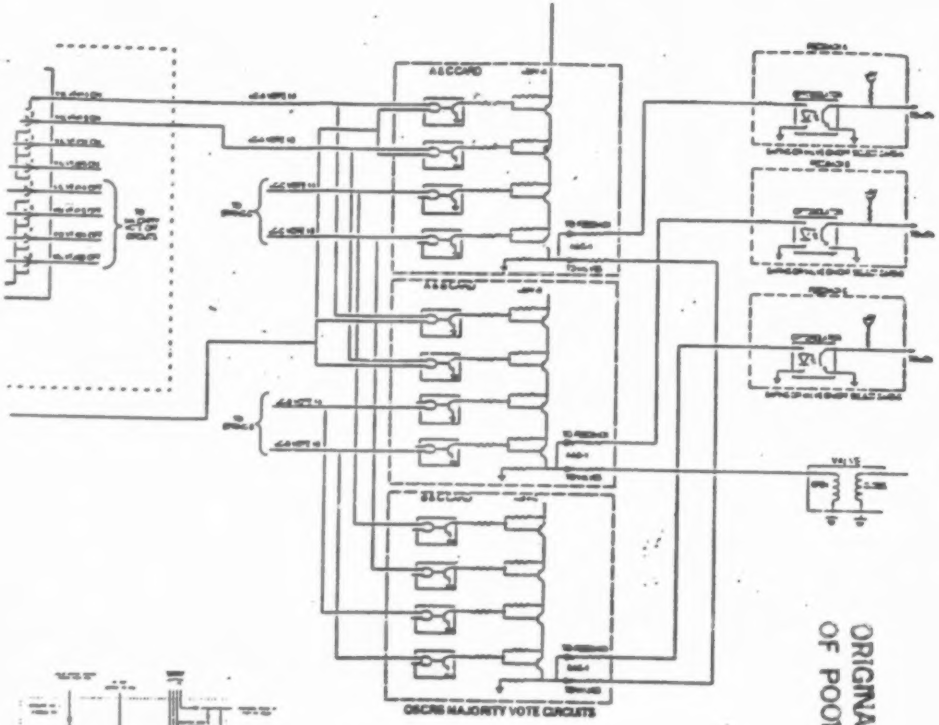

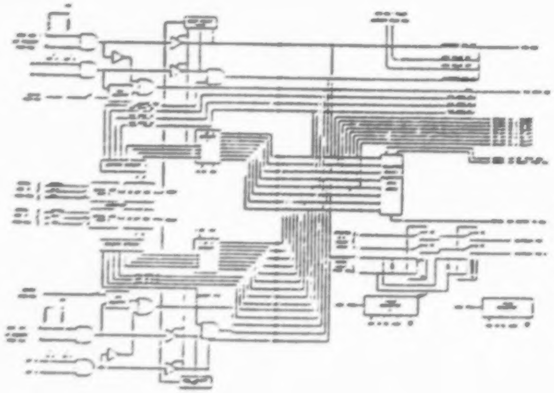

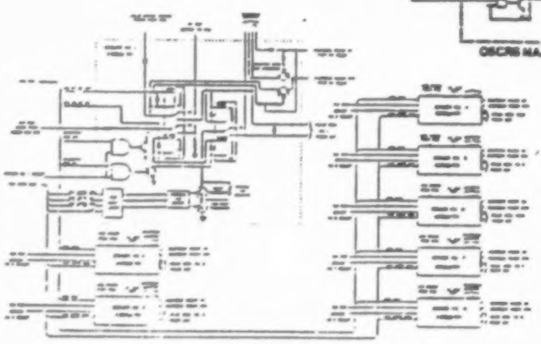

ORIGINAL PAGE IS
OF POOR QUALITY

INTERFACES

INTERFACES

- O SFHT INTERFACES REQUIRED TO BE COMPATIBLE WITH HOSTS:
  - O ORBITER INTERFACES SPECIFIED IN SPACE SHUTTLE SYSTEM PAYLOAD ACCOMODATIONS JSC 0700 VOL XIV & ICD 2-19001
  - O SPACE STATION GUIDE SPACE STATION PROGRAM OFFICE BASELINE DOCUMENT JSC 30255
  - O OMV GUIDE OMV PRELIMINARY DESIGN DOCUMENT NAS8-36800, PAYLOAD USERS GUIDE ANNEX 1 DP 670 BAS8-36800 TRW
  - O ELV GUIDE LAUNCH VEHICLE T34d7/CENTAUR MCR
- O STANDARD INTERFACES FOR ORBITER UTILIZED TO MINIMIZE COSTS, FLEXIBILITY AND REDUCE GROUND OPERATIONS
  - O SFHT CAN BE MOUNTED IN VARIOUS P/L BAY LOCATIONS
  - O SFHT INTERFACES ELECTRICAL POWER AND DATA TO GSE
  - O SFHT USES ORBITER POWER
- O SAME CONSIDERATION GIVEN TO HOSTS:
  - O SPACE STATION, OMV AND ELV
- O FOR USERS TRANSFER OF SUPERFLUID HELIUM INCLUDES JSC COUPLER (MOOG)

SFHT SYSTEM BLOCK DIAGRAM

- THE SFHT SYSTEM HAS AVIONICS INTERFACES TO MECHANICAL/STRUCTURES, FLUID AND THERMAL CONTROL SUBSYSTEMS FOR THE FUNCTIONS WITHIN THE BLOCKS.
- IN ADDITION, BOTH USERS AND HOSTS WILL REQUIRE THE SAME AVIONICS BLOCK FUNCTIONAL CONSIDERATIONS.
- GSE FUNCTIONS ARE INCLUDED TO EMPHASIZE THEIR UNIQUENESS FOR GROUND OPERATIONS.

SFHT SYSTEM BLOCK DIAGRAM

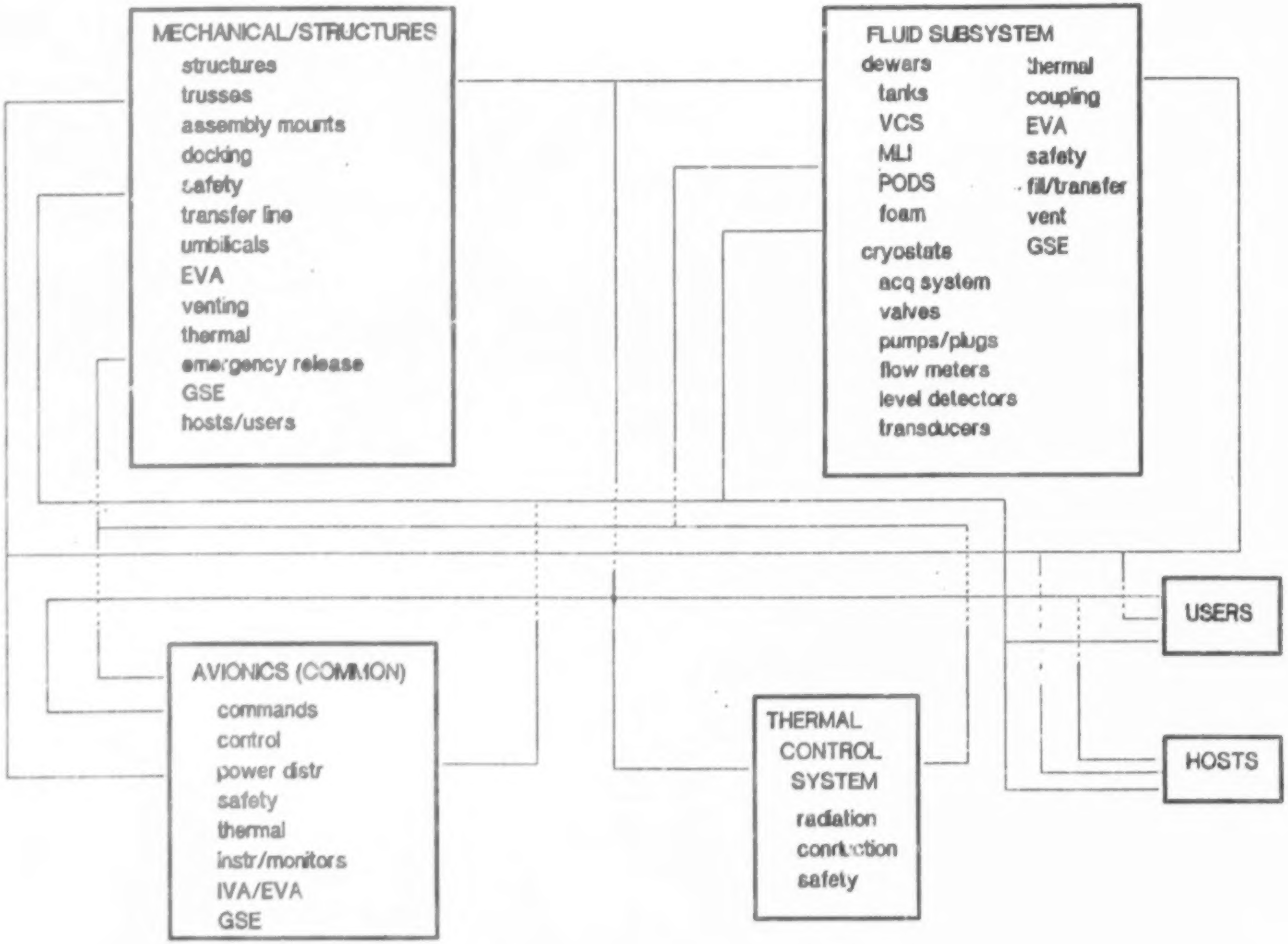

SFHT

INTERFACES CONT.

c-4

- O SFHT TO ORBITER INTERFACES
  - O AVIONICS - KEPT TO STANDARDIZED UNITS
  - O POWER - MAIN AND DC THROUGH SIP @ X_0 645
    - AC SEPARATE THROUGH SIP X_0 643
    - REDUNDANCY IMPLEMENTED
- O COMMAND - SIMILAR TO OSCRS, ORGINATES AT AFD PAYLOAD SUPPORT AREA - SFHT PANEL/KEYBOARD
  - COMMONALITY COMPUTERS - AFD AND CARGO BAY FOR 2 FAILURE TOLERANT/INADVERTANT COMMAND REQUIREMENTS
- O DATA - SIMILAR TO OSCRS
  - PDI, MDM AND MTU
  - S OR Ku DOWN LINKS (Std/non-std format)
  - SMCH, SIPS, LIMITED GPC USE

SFHT/ORBITER INTERFACE BLOCK

- THIS SFHT/ORBITER INTERFACE BLOCK DIAGRAM ILLUSTRATES SOME OF THE AVIONICS INTERFACES EXPECTED.

- ON THE AFD SIDE, POWER IS DELIVERED TO THE ORBITER CARGO BAY & SFHT AT X_0 645 AND IS DESIGNATED AS MAIN BUS C. A SEPARATE LOCATION X_0 IS ALLOCATED FOR AC POWER (NOT SHOWN HERE). THEY ARE ROUTED VIA THE STANDARD MIXED CARGO HARNESSING.

- THE MAIN LINE CONTAINS THE SFHT CPU & STANDARD SWITCHING FUNCTIONS THROUGH THE CARGO BAY AND TO THE SFHT/ORBITER UMBILICAL.

- CLOSED CIRCUIT TELEVISION (REDUNDANT) IS ROUTED FROM THE PAYLOAD RETENTION SYSTEM TO THE CARGO BAY AND TO THE SFHT/ORBITER UMBILICAL.

- UMBILICALS AVAILABLE (BESIDES THE SFHT/ORBITER) ARE: THE OMV (HOST), USERS, FSS AND THE HE II TRANSFER LINE.

SFHT / ORBITER INTERFACE BLOCK

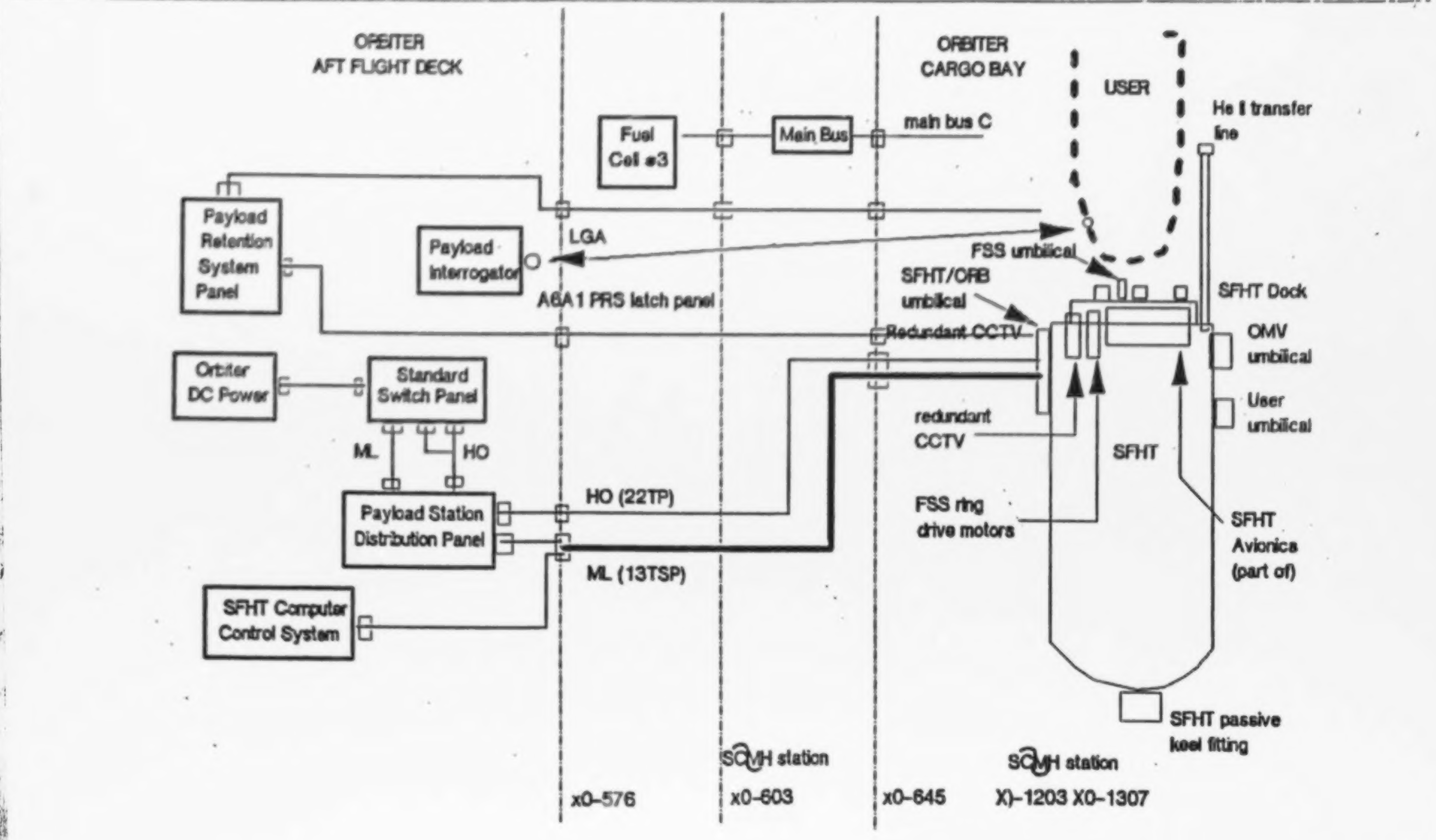

SFHT

INTERFACES CONT.

- O SFHT TO SPACE STATION (SS) INTERFACES
  - O REMOVED FROM ORBITER VIA RMS OR SS SBM AND MATED TO SIA (PHASE I) OR SERVICING FACILITIES (PHASE II)
  - O TRANSFER OF SFHT FROM ORBITER TO SS HANDLED BY MOBILE SERVICE CENTER (MSC) OR SERVICING FACILITY MANIPULATOR (SFM)
    - O THIS UNIT HAS A REMOTE MANIPULATOR SERVICER (RMS) ARM AND SPECIAL PURPOSE DEXTERIOUS MANIPULATORS (SPDM) FOR POSITIONING AND MANIPULATING
    - O ALSO AVAILABLE ARE AVIONICS AND COMMUNICATIONS
  - O SAFETY, TRANSFER OPERATIONS, HOUSING AND VENTING ARE ITEMS FOR FURTHER STUDY

SFHT/ORBITER/SS INTERFACES

- O THE ORBITER TO SFHT INTERFACES ARE STRUCTURAL KEEL FITTINGS (PASSIVE) UTILIZING PAYLOAD RETENTION LATCH ASSEMBLIES OF THE FLIGHT SUPPORT SYSTEM STANDARD DESIGNS. VENTING CONNECTS THE 3 SFHT VENTS TO THE EXISTING ORBITER AFT VENTS. THE STANDARD ORBITER UMBILICAL IS UTILIZED FOR AVIONICS CONNECTIONS OF COMMAND, STATUS, MONITORING AND POWER

- O THE SPACE STATION TO SFHT INTERFACES CONNECT THE MOBIL SERVICING CENTER OR THE SERVICING FACILITY TO GRAPPLE FITTINGS, AND THE SS UMBILICAL CONNECT COMMAND, STATUS MONITORING AND POWER OF THE AVIONICS

SFHT

SFHT/ORBITER/SS INTERFACES

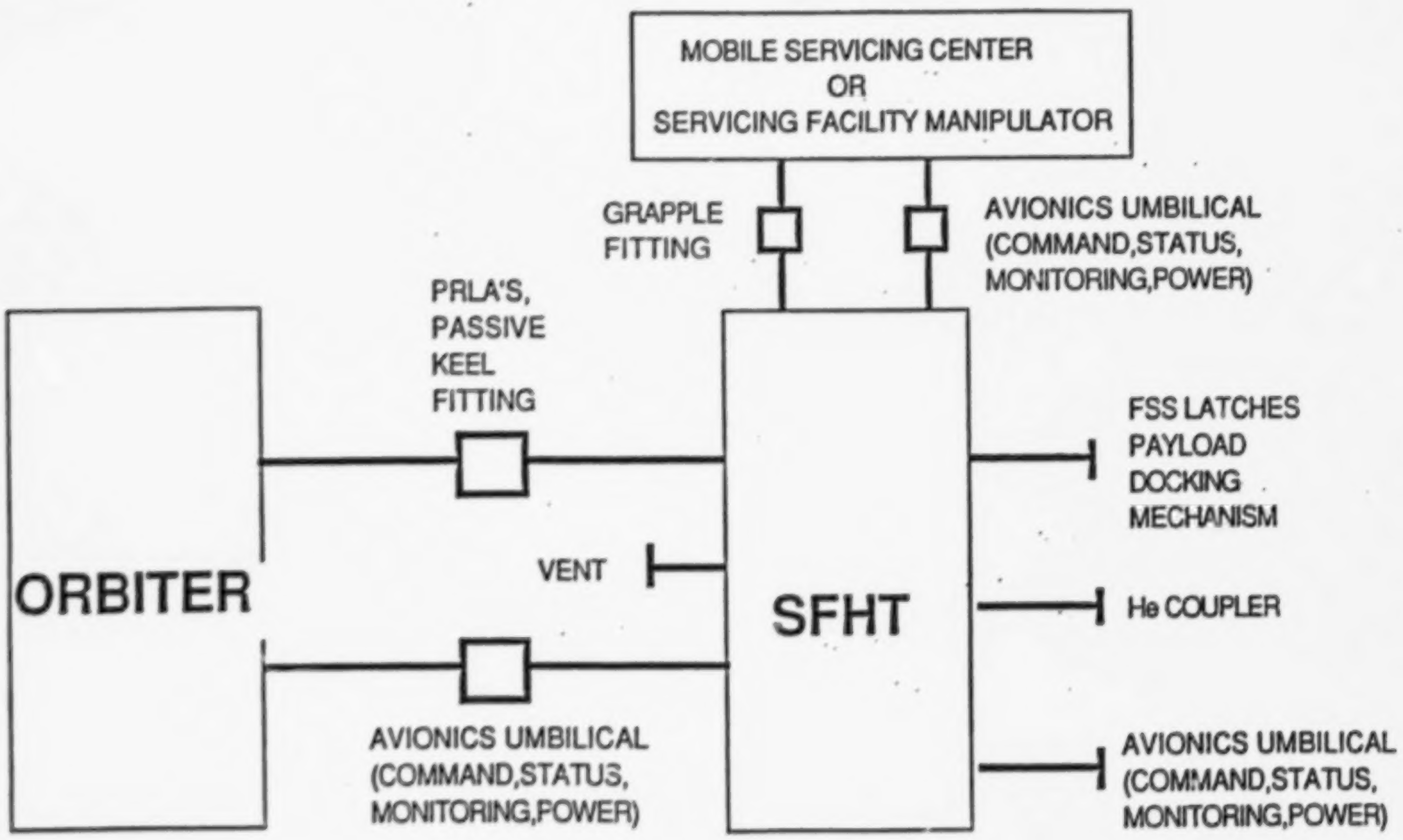

INTERFACES CONT.

- O A MOBILE WORK STATION (MWS) HAS CONTROLS AND A UNIVERSAL PAYLOAD ADAPTER (UPA) FOR SFHT CONSIDERATIONS

O FOR PAYLOAD USERS, THE SFHT CAN INTERFACE THE COUPLER (AND FSS LATCHING) TO THE SS RETENTION AND POSITIONING SYSTEM (RPS) FOR STRUCTURE SUPPORT, ROTATION AND TILTING PURPOSES

- O REMOTE ACTUATED UMBILICALS ARE AVAILABLE BUT THE SFHT FLUID TRANSFER LINE MUST BE REDESIGNED FOR AUTOMATIC RESUPPLY CAPABILITY
- O ALSO, USE OF ADDITIONAL MDM's REQUIRES CONSIDERATION

SFHT/SS/USER INTERFACES

- O THIS BLOCK DIAGRAM SHOWS THE MAJOR INTERFACES BETWEEN THE SFHT AND A SPACE STATION RETENTION AND POSITIONING SYSTEM (RPS) WHERE USERS ARE EXPECTED TO BE STRUCTURALLY SUPPORTED, ROTATED OR TILTED. THIS IS AN EXPECTED PART OF THE SS SERVICING FACILITY. IN LIEU OF NO SF, A STATION INTERFACE ADAPTER (SIA) WITH A MODIFIED PAYLOAD INTERFACE ADAPTER (PIA) ARE BERTHING POSSIBILITIES FOR ATTACHED PAYLOADS
- O FSS LATCHES, THE He COUPLER AND NECESSARY UMBILICAL FOR AVIONICS ARE POTENTIAL OPTIONS
- O THE SIA IS ALSO AN SFHT POSSIBLE ATTACH BERTH

SFHT/SS/USER INTERFACES

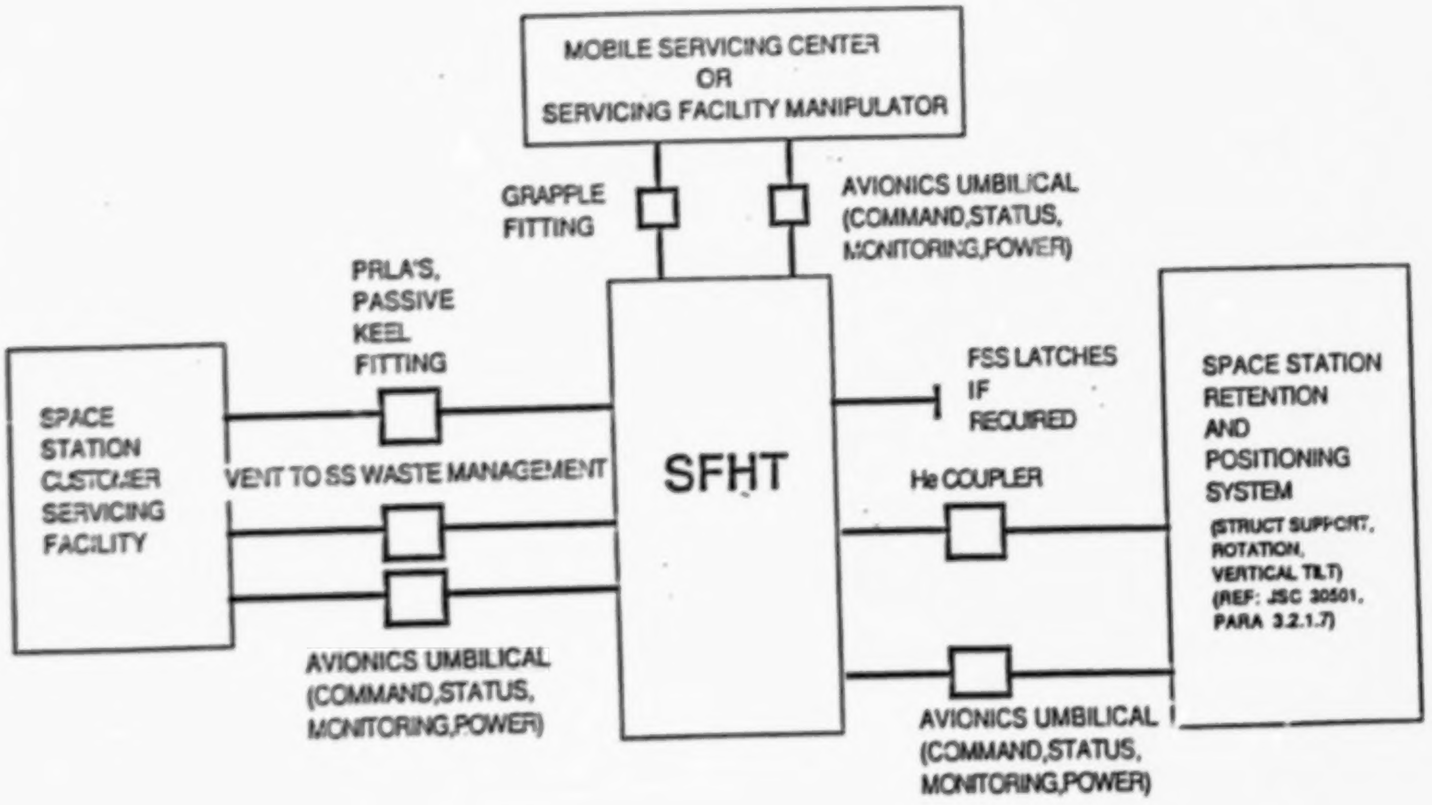

SFHT/FREE FLYERS (AXAF)/SS INTERFACES

- O WHEN THE FREE FLYER AXAF IS DOCKED TO SS, STRUCTURAL INTERFACES WILL BE THE FSS TYPE LATCHES AND THE SFHT TRANSFER LINE WITH ITS JSC COUPLER. ELECTRICAL CONNECTIONS ARE THROUGH THE FSS UMBILICAL FOR FSS MOTOR CONTROLS AND THE XRS (USER PECULIAR) UMBILICAL FOR AVIONICS CONNECTION OF COMMAND, STATUS, MONITORING CONTROL AND POWER. THE COMMONALITY COMPUTERS ARE SHOWN ROUTED TO THE SS INTERFACE UNIT AND SUBSEQUENTLY TO THE SS LABORATORY, HABITAT MODULES OR NODES. SINCE SS PROVIDES MORE THAN 2-FAULT TOLERANT REQUIREMENTS, A POSSIBILITY EXISTS TO HAVE SS CONTROL THE OSCRS TYPE AVIONICS LEADING TO DELETING THE OSCRS COMPUTERS.

- O THE SFHT IS SHOWN MOUNTED (DOCKED) TO A STATION INTERFACE ADAPTER IN LIEU OF PHASE 2 SERVICING FACILITIES.

SFHT

SFHT/FREE FLYER (AXAF)/SS INTERFACES

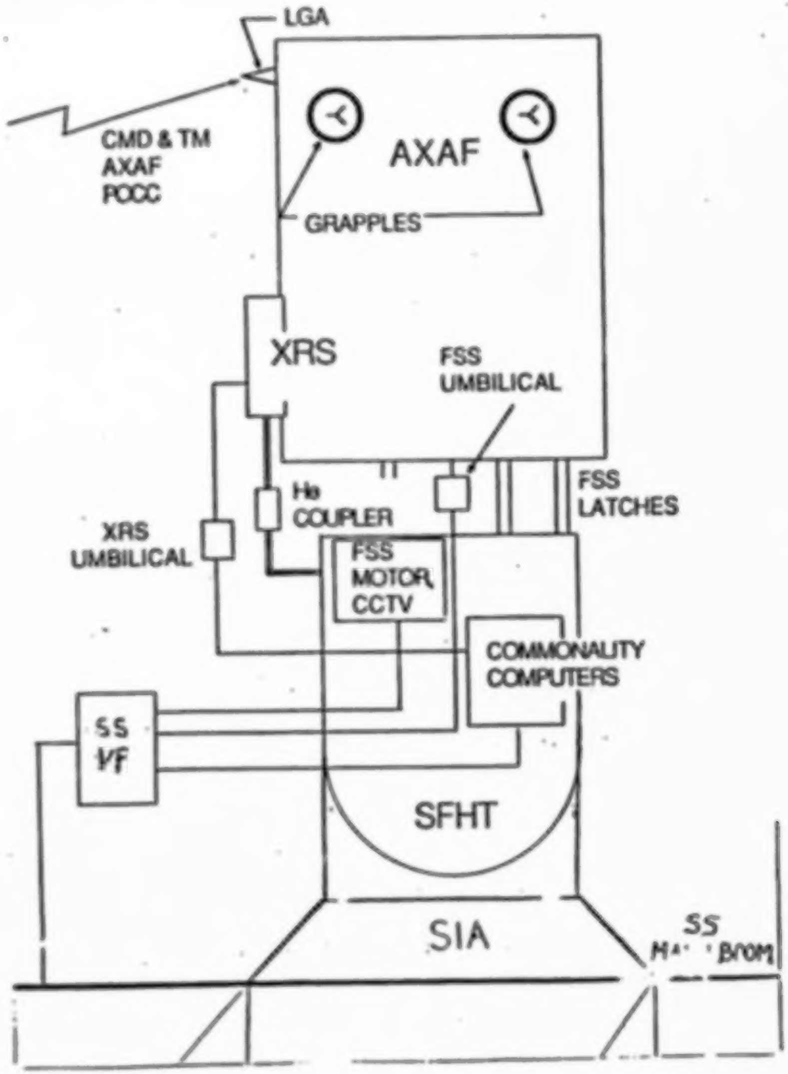

SS/SIA - SFHT TO ASTROMAG OR LPE

- A POSSIBLE MEANS TO DOCK SFHT AT SPACE STATION IS TO A STATION INTERFACE ADAPTER STRUCTURE.

- A SIMILAR ARRANGEMENT EXISTS FOR ATTACHED PAYLOADS LIKE ASTROMAG AND/OR THE LAMBDA POINT LAB MODULE EXPERIMENT WHERE RESUPPLY SFHT OPTIONS ARE ALSO POSSIBLE.

SFHT

SS/SIA –SFHT TO ASTROMAG OR LPE

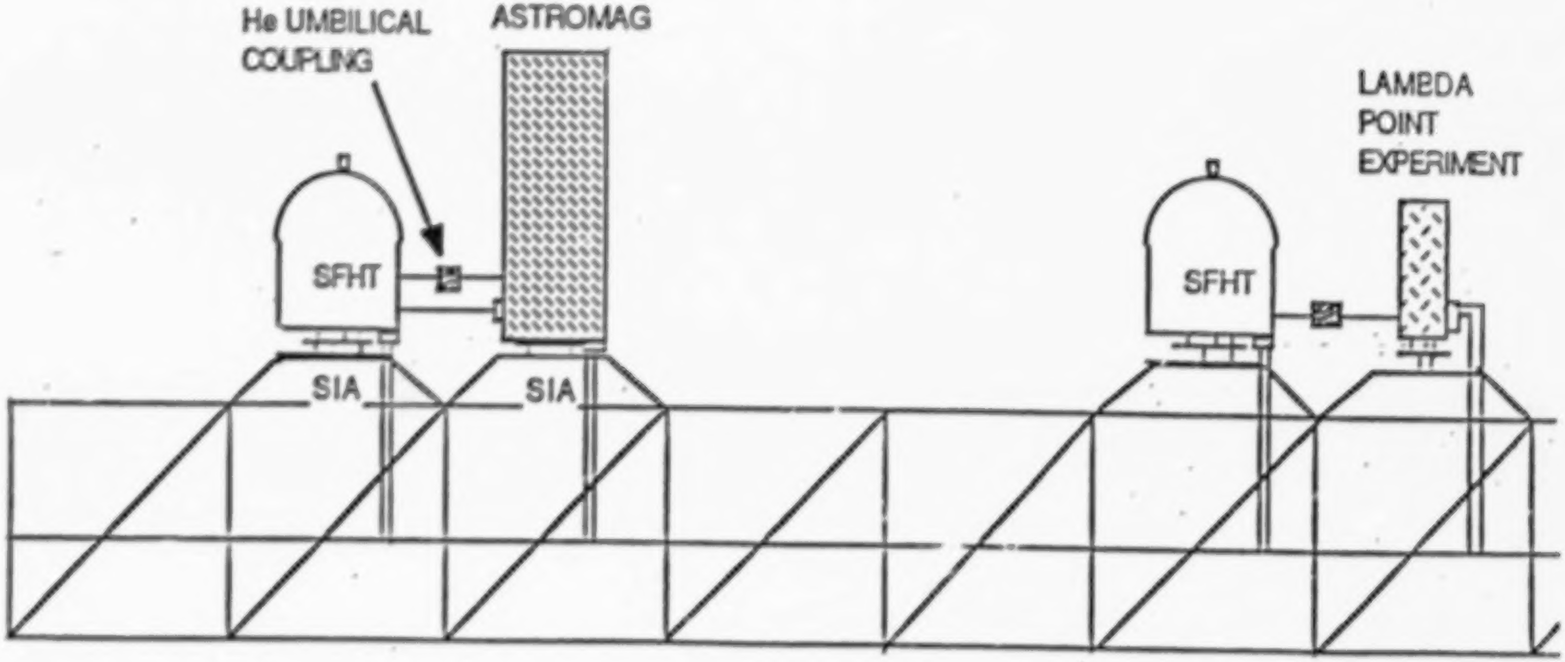

COMPARISON OF THREE OUTRIGGER CONFIGURATIONS

- THE THREE CONFIGURATIONS ARE POTENTIAL LOCATIONS FOR THE LARGE ATTACHED PAYLOAD ASTROMAG AT THE SPACE STATION RELATIVE TO PLACEMENT AND OPERATION OF THE MOBILE SERVICING CENTER. THE ASTROMAG REQUIREMENT FOR REMOTENESS AND ISOLATION TO AVOID INTERFERENCE POSES A PROBLEM FOR THE MSC SERVICING ARM TO REACH STANDARD INTERFACE CONNECTORS OF ASTROMAG FOR DETECTOR REPLACEMENT. THE ASTROMAG TRUSS MOUNTS TO A PAYLOAD INTERFACE ADAPTER MOUNTED ON A STATION INTERFACE ADAPTER THAT IS REMOTE FROM THE SS MAIN TRUSS BOOM WHERE THE MSC IS LOCATED. SFHT MAY BE REQUIRED TO BE MOUNTED IN A SIMILAR FASHION FOR RESUPPLY TO ASTROMAG.

SFHT

COMPARISON OF THREE OUTRIGGER CONFIGURATIONS

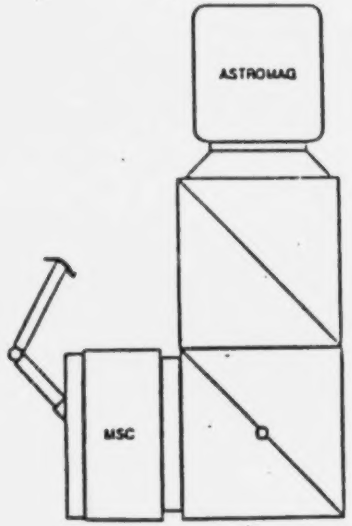

CONFIGURATION ONE

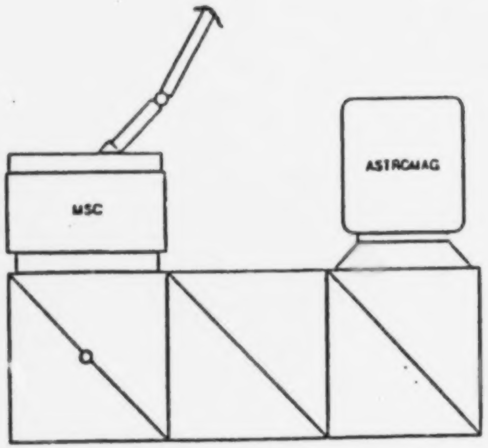

CONFIGURATION TWO

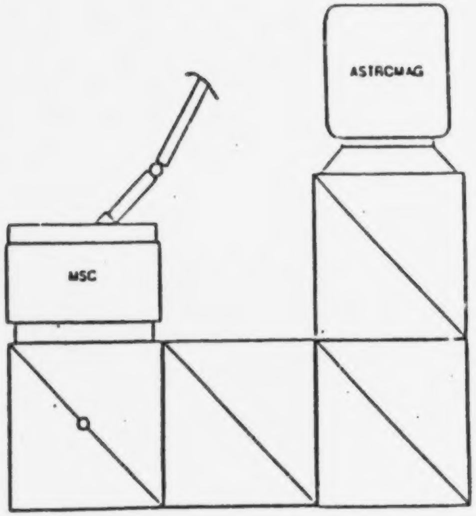

CONFIGURATION THREE

SFHT/OMV INTERFACE

- O THE INTERFACES ILLUSTRATED HERE SHOW THE SFHT AND THE OMV AVIONICS CONTROL AND DATA INTERFACE CONSIDERATIONS. OMV DOES NOT PROVIDE PAYLOADS WITH 2-FAULT TOLERANT COMMAND, DATA AND POWER. ALSO THERE IS NO DATA STORAGE DEVICES.

- O EACH USER OF OMV MUST PROVIDE A REMOTE INTERFACE UNIT (RIU) FOR THE MULTIPLEX DATA BUSES OF DMV (COST?) AND THE OMV DATA FORMATS ARE NOT STANDARD FORMAT (SPECIAL AVIONICS I/F NEEDED). IN ADDITION, IF 2-FAULT TOLERANCE IS TO MET, THE SFHT AVIONICS WOULD NEED A SECOND AND POSSIBLE THIRD RIU

SFHT

SFHT/OMV INTERFACE

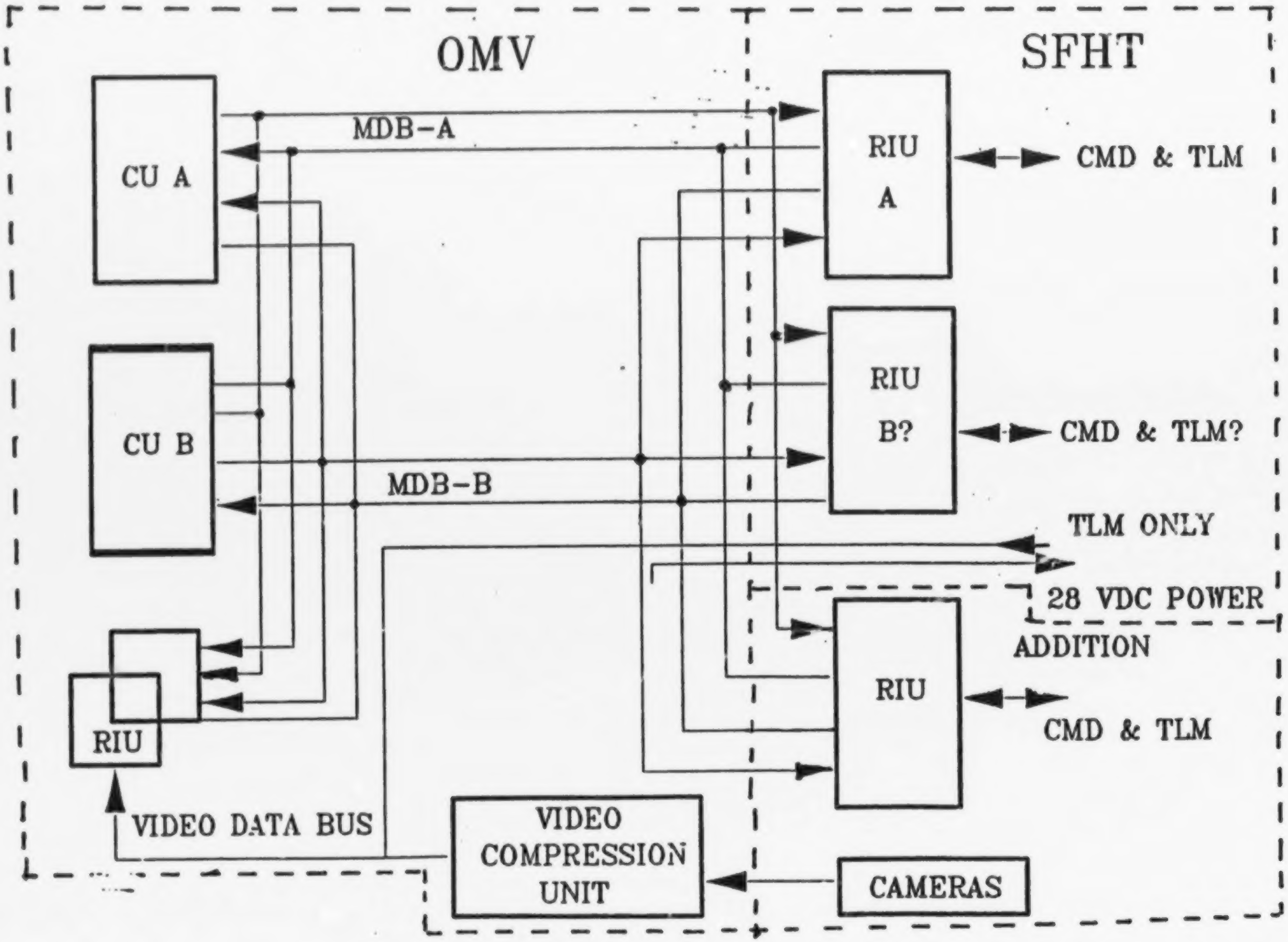

SFHT

INTERFACES CONT.

- O SFHT TO ELV INTERFACES
  - O CONSIDER THE TITAN IV ENVELOPE, ENVIRONMENT AND WEIGHT COMPATIBILITIES
  - O BUT AN ON-ORBIT TRANSFER VEHICLE IS REQUIRED FOR POWER, COMMUNICATIONS, ATTITUDE STABILIZATION AND GUIDANCE TO BE FULLY SERVICEABLE
  - O CONSIDER A 970 L SFHT OPTION MADE COMPATIBLE FOR A DELTA II CLASS OF BOOSTER (SOME SERVICES FOR A LIMITED TIME ARE INCLUDED)
- O LIMITING CONSIDERATIONS
  - O BOOSTERS WITH A 2300 LB PAYLOAD AND ACCOMMODATION FOR 9 FT DIAMETER

SFHT

INTERFACES CONT.

- SFHT/EVA INTERFACES CENTER AROUND SAFETY RELATED TO MECHANICAL/STRUCTURAL ENVIRONMENTS
  - WORK POSITION SUPPORTS AND PROXIMITY
  - PROTECTION AFFORDED BY SUITS AND MATERIALS
  - CRYOGENIC TEMPERATURE CONSTRAINTS, e.g., TOUCH TEMPERATURES
  - TETHERS - ASTRONAUT AND TOOLS
- OPERATIONAL CONSIDERATIONS
  - MULTI-TASKING: AXAF AND SFHT
  - CONSTRAINTS: TEMPERATURES, VENTING, TRANSFER LINE FORCES, SPILL

INTERFACES CONT.

- O SFHT STRUCTURAL INTERFACESACCOUNT FOR
  - O FLUID SUBSYSTEM INTEGRATION, SS TYPE LATCHES ON DOCKING RING, TRUNNION PIN ATTACHMENTS, SIA's, UMBILICALS, AFD ASSEMBLIES, SIP's, VENT DUCTS AND AVIONICS ASSEMBLIES
  - O FSS STANDARD 3 POINT DOCKING MECHANISM (TPDM) IS PROVIDED FOR USER DOCKING, BOTTOM FOR OMV OPTION
  - O AN ADDITIONAL CCTV AND LIGHTS MAY BE REQUIRED ON THE TPDM FOR EXTENDED SFHT USE
  - O THERMAL, C.G. AND STABILITY CONSTRAINTS REQUIRE FURTHER EXAMINATION
  - O DOCKING RATES REQUIRE EXAMINATION OF USING THE "TUMBLING SATELLITE RECOVERY KIT"
  - O PROVISION IS MADE FOR VISUAL BERTHING TARGETS
  - O AUTOMATION OF UMBILICALS (GROWTH) WILL REQUIRE CHANGING FOR THE ALREADY STANDARD MATE/DEMATE SFHT CONNECTORS
  - O THE SFHT TRANSFER LINE WILL REQUIRE NON-EVA REDESIGN FOR ALIGNMENT, RIGIDITY AND USER STANDARDIZATION

SF HELIUM TRANSFER TANKER/LAUNCH CONFIGURATION

O THIS 3 FIGURES CAN BE USED TO ILLUSTRATE THE SFHT AND ITS MAJOR STRUCTURAL COMPONENTS. THE DEWAR MOUNTED IN ITS STRUCTURE WITH ITS INLET/OUTLET SHROUD FOR SAFETY CONDITIONS, THE CABLE AND STANDARD INTERFACE PANEL VENT LINE DEPARTURE, THE VENT LINES, THE FLEXIBLE TRANSFER LINE AND ITS STOWAGE POINTS, THE CRYOSTAT CONNECTOR UNIT, THE FSS STANDARDIZED DOCKING RING AND FSS STANDARD LATCHES, THE REMOVEABLE GRAPPLE FIXTURE AND TARGETS, THE ELECTRONICS HOUSING, THE REMOVEABLE KEEL FITTING OMV DOCKING CAPABILITIES, THE ASTRONAUT FOOT RESTRAINTS AND (IN OTHER FIGURES) POTENTIAL TOOL STORAGE, ORU MOUNTS AND PORTABLE FOOT RESTRAINTS.

ORIGINAL PAGE IS
OF POOR QUALITY

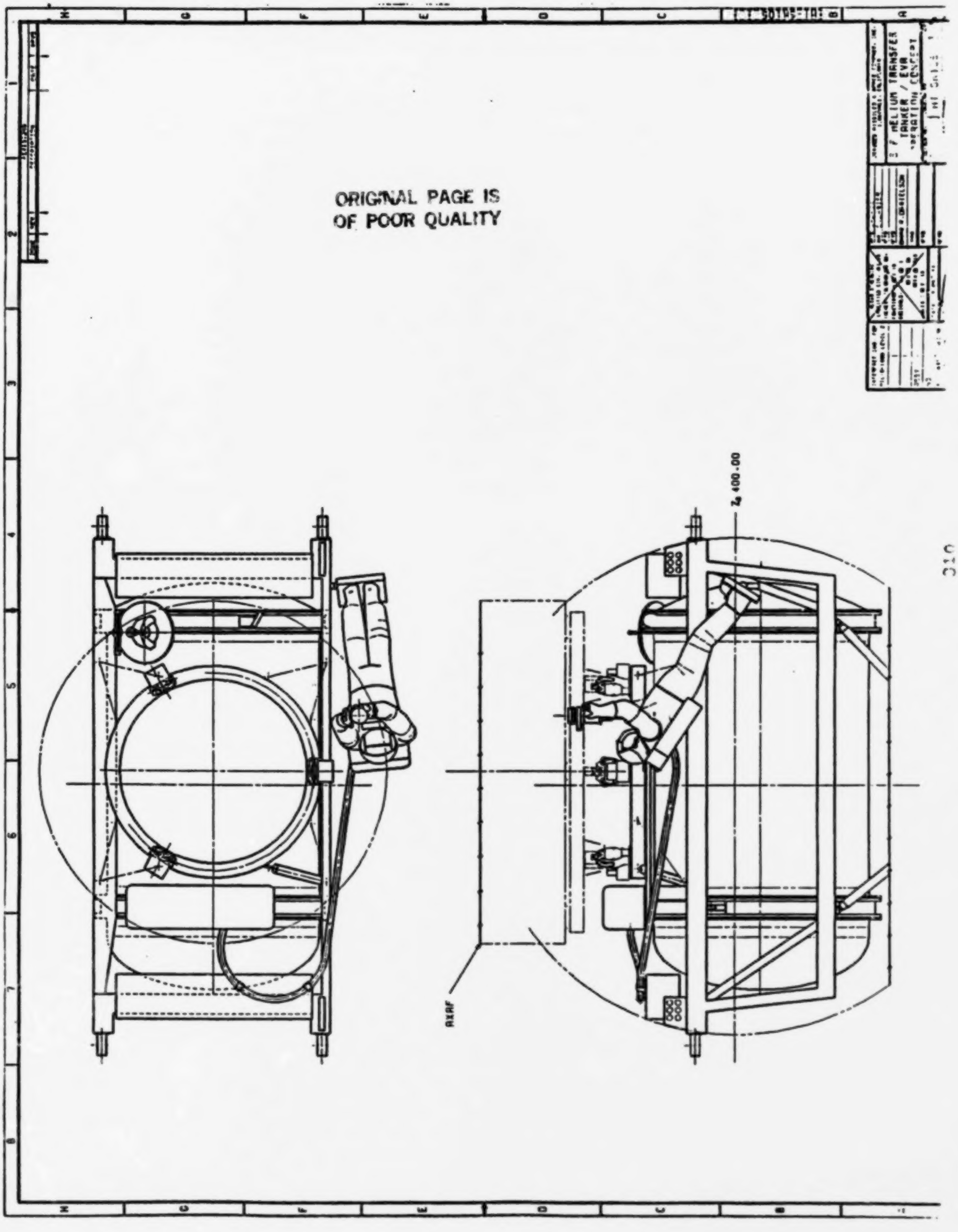

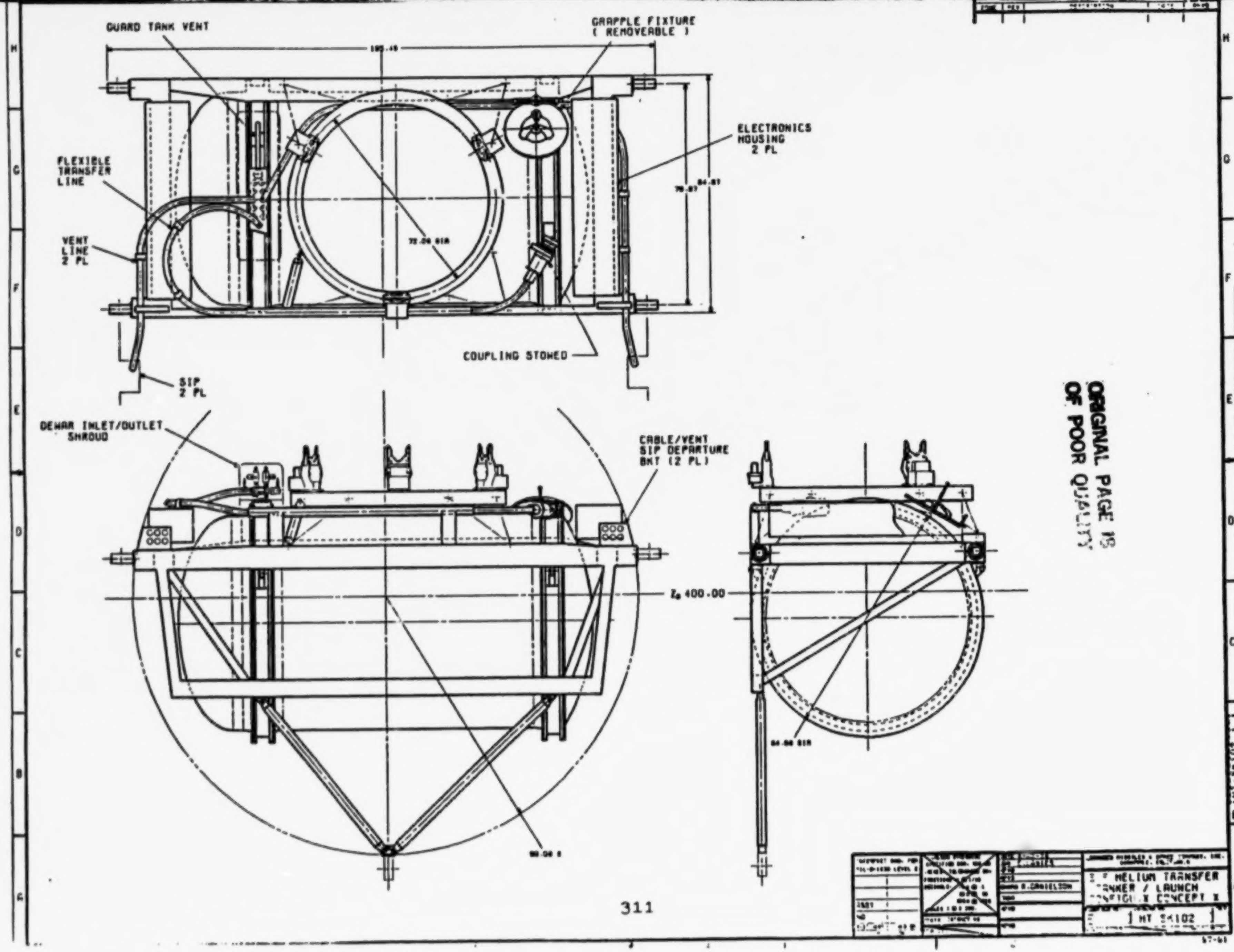

ORIGINAL PAGE IS
OF POOR QUALITY

ORIGINAL PAGE IS
OF POOR QUALITY

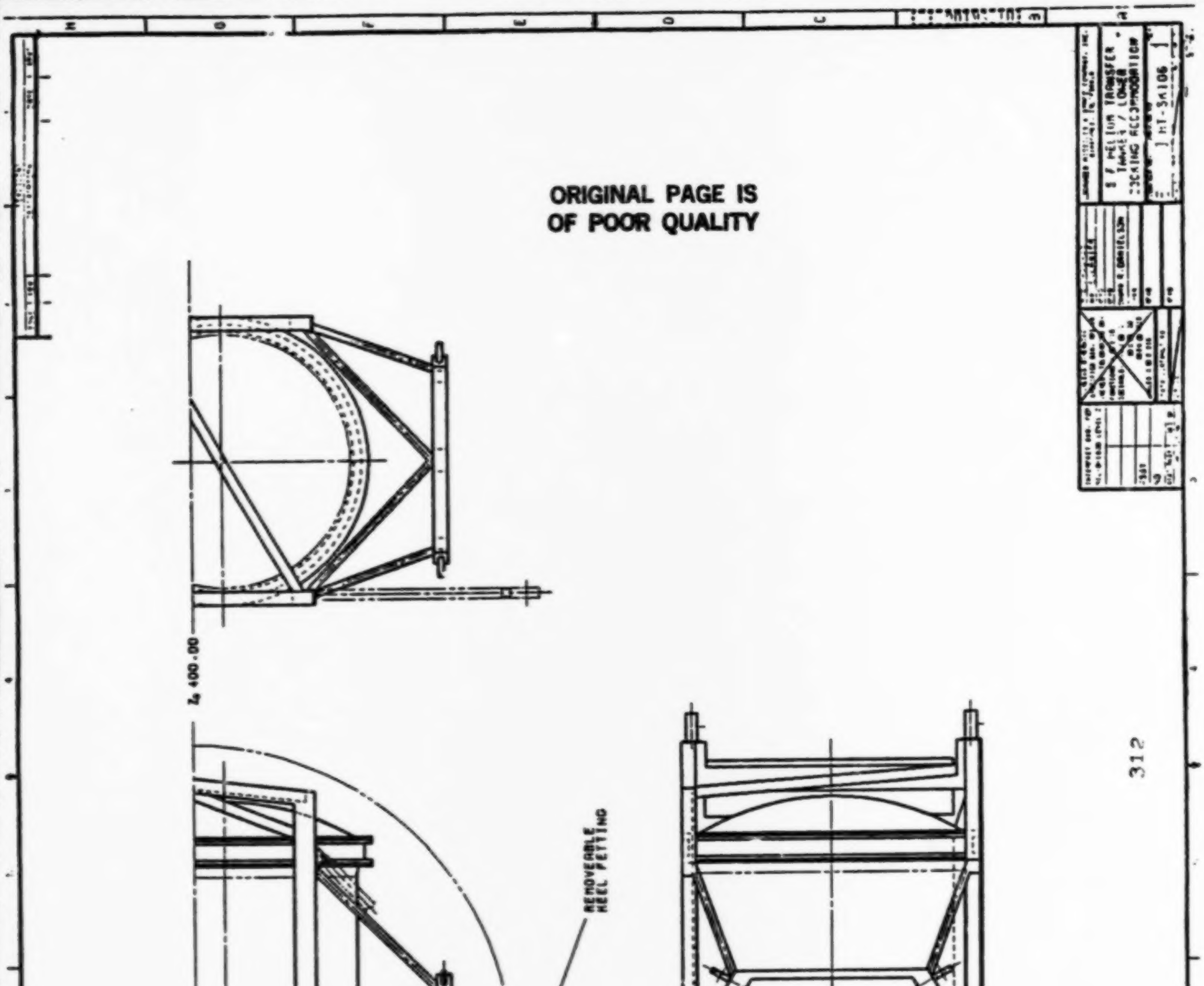

INTERFACES CONT.

- O AVIONICS, SIMILAR TO ORBITER SFHT, MOST PROBABLY WILL REQUIRE EXPANSION FOR COMMAND AND DATA HANDLING, ALTHOUGH ORBITER DEVOTED CPU's NOT NEEDED
  - O EXAMPLE OF COMPLEXIBILITY OF INTERFACE TO BE CHANGED ILLUSTRATED IN CABLE INTERFACE OF MATURE AVIONICS SUBSYSTEM

SFHT TO ORBITER AVIONICS INTERFACES

- O THIS FIGURE SHOWS INTERFACING BETWEEN THE ORBITER AFD, ITS CARGO BAY AND A SIP THAT ROUTES AVIONICS FUNCTIONS THROUGH THE SFHT TO A USER FREE FLYER, IN THIS CASE AXAF. THE COMMONALITY COMPUTERS THEN MATE TO THE XRS (USER) UMBILICAL OF AXAF. COMMUNICATIONS IS MAINTAINED BETWEEN THE AVIONICS AFD PAYLOAD INTERROGATOR AND THE LOW GAIN ANTENNA OF AXAF ON A TBD LINK.

SFHT

SFHT TO ORBITER AVIONICS INTERFACES

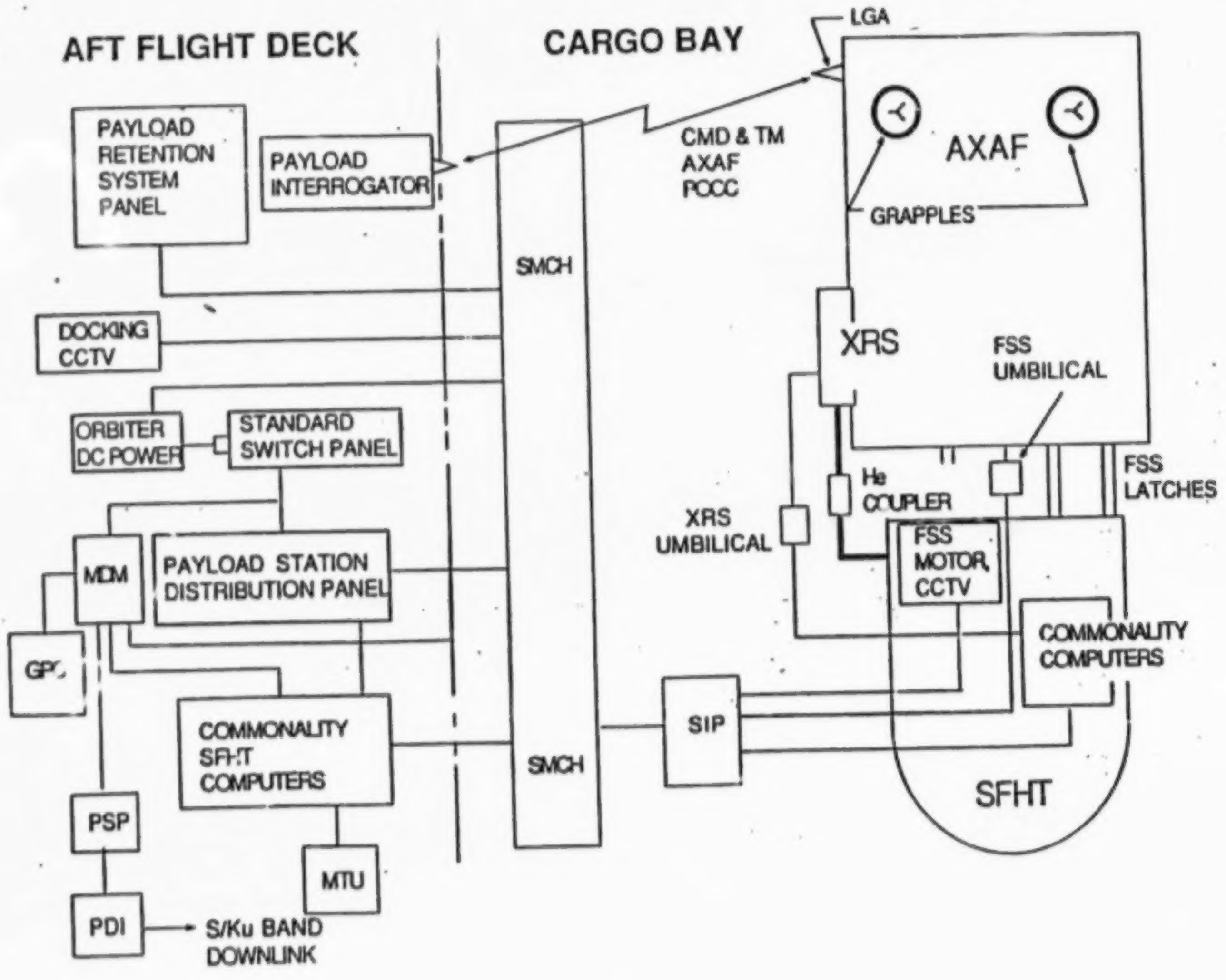

AVIONICS SUBSYSTEM/HARNESS BLOCK DIAGRAM

o THIS FAIRCHILD AVIONICS HARNESS DIAGRAM ILLUSTRATES THE MATURITY OF THIS DESIGN CONCEPT. HARDWARE CHANGES COULD BE EXPECTED FROM SFHT REQUIREMENTS.

SFHT

AVIONICS HARNESS DIAGRAM – FAIRCHILD

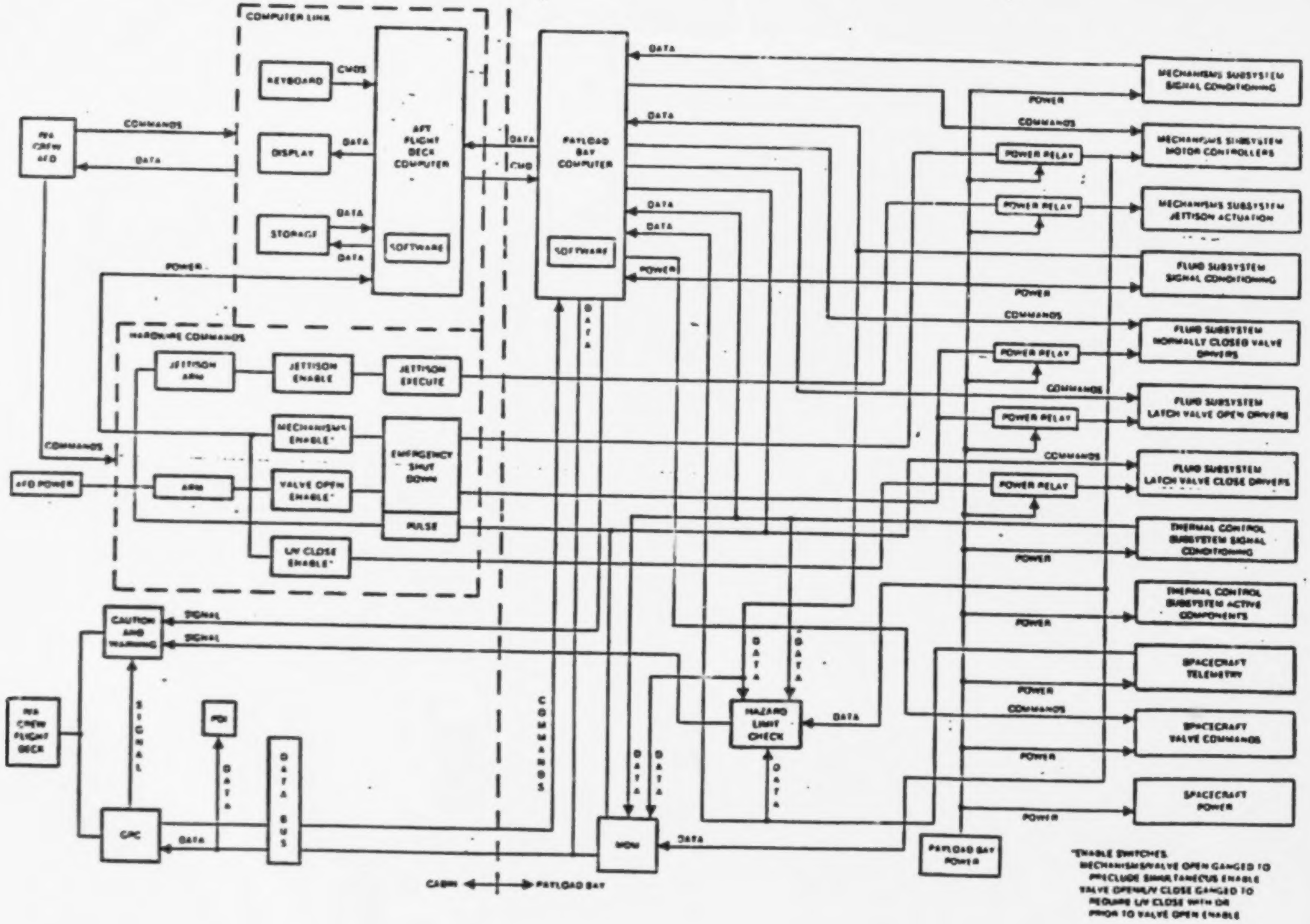

ORIGINAL PAGE IS
OF POOR QUALITY

SFHT

INTERFACES CONT.

- O UMBILICALS
  - O ARE OF 5 TYPES
    - FLUID TRANSFER/FILL LINE, JSC COUPLER
    - STANDARD ELECTRICAL - ORBITER OR HOSTS
    - USERS ELECTRICAL - AXAF STANDARD
    - VENTING - ORBITER DUCTING
    - TETHERS - ASTRONAUT, TOOLS

EVA

SFHT

EVA

- 0 REQUIREMENTS REFERENCES
    - 0 STS EVA DESCRIPTIONS AND DESIGN CRITERIA, JSC 10615
    - 0 SATELLITE SERVICES CATALOG/TOOLS AND EQUIPMENT, JSC 19211
    - 0 SATELLITE SERVICES HANDBOOK/INTERFACE GUIDELINES, JSC 19212

- 0 EVA PLAN
    - 0 DESIGN REVIEW - SFHT DESIGN CONSISTENT WITH EVA OPERATIONS
    - 0 PROCEDURES WILL BE DEVELOPED CONSISTENT WITH PIP TYPE OPERATIONS FOR EACH USER
        - 0 INCLUDES CONTINGENCIES, EVALUATION AND VERIFICATION
    - 0 MOCKUPS (TBD) - NO SPECIAL SFHT TOOLS
    - 0 DEVELOPMENTS OF SCENARIOS IN PIP FACILITIES
    - 0 SUPPORT AND COORDINATION WITH STS, SS, OMV, ELV AND USER(s)
    - 0 CREW TRAINING

SF HELIUM TRANSFER TANKER/EVA

- THIS DRAWING ILLUSTRATES AN ASTRONAUT IN POSITION TO CONNECT THE SFHT TRANSFER LINE TO A DOCKED FREE FLYER, IN THIS CASE AXAF.
- THE FOOT RESTRAINTS AND TRANSFER LINE LOCATIONS WITH POTENTIAL TIE DOWN POINTS ARE SHOWN.

- EVA DESIGN FOR SFHT INCORPORATES
  - RMS/MOBILE FOOT RESTRAINTS AT THE SFHT AND USER INTERFACE
  - HANDHOLDS (TBD) AND FOOT RESTRAINTS AT THE SFHT
  - SPECIAL TOOLS ASSOCIATED WITH THE JSC COUPLER FOR ON-ORBIT TRANSFER (INCLUDING TETHERS)
    - NO OTHER SPECIAL SFHT TOOLS
  - SAFETY CONSIDERATIONS (REF - SHOOT SAFETY HAZARDS REPORTS)

ORIGINAL PAGE IS
OF POOR QUALITY

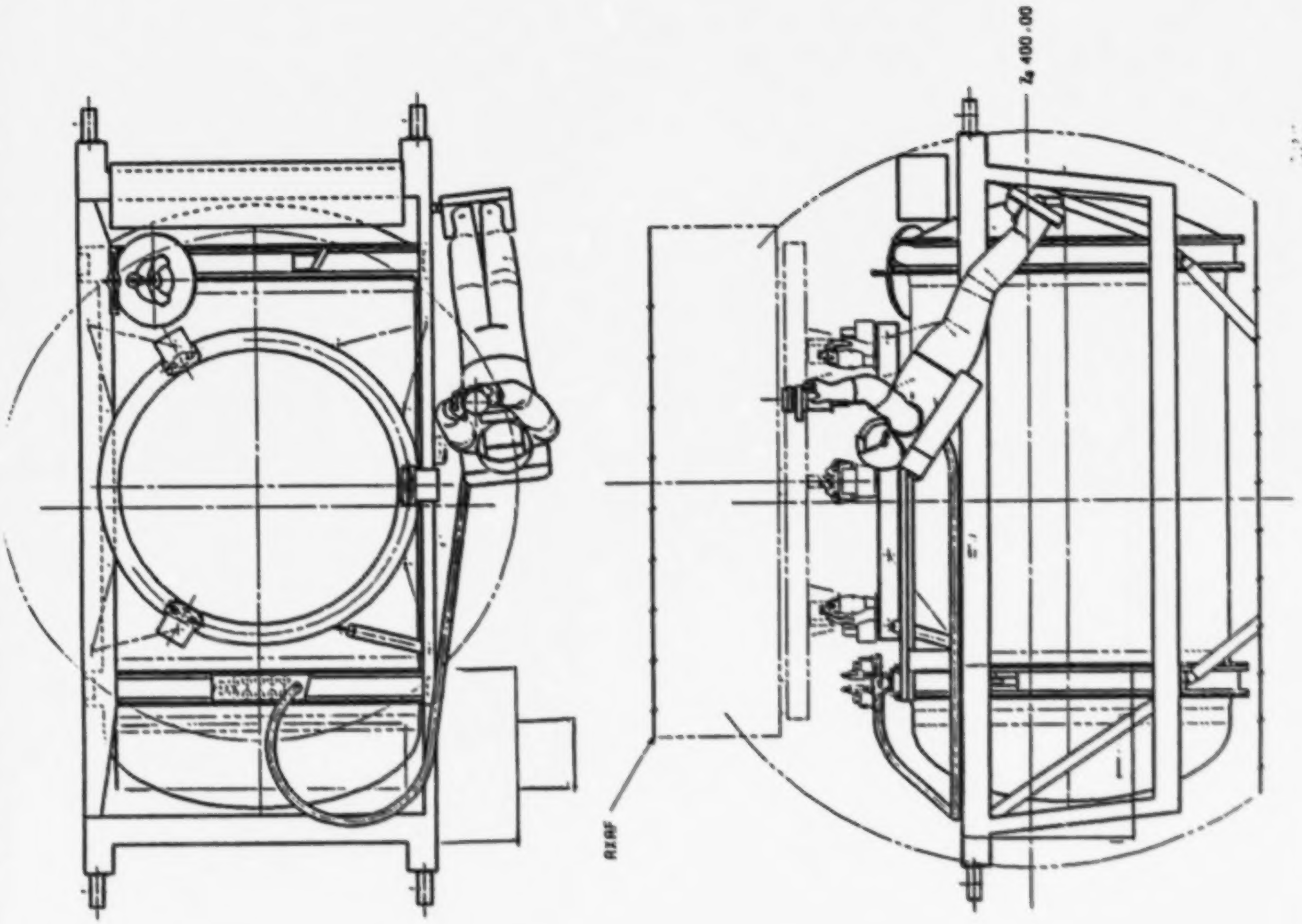

EVA CONT.

0 AN EXAMPLE OF A EVA SCENARIO FOR A SMALL FREE FLYER

Item	Description	Time (min)
1.	Astronaut egress from airlock	--
2.	Tether tool carrier to SFHT	1
3.	Remove PFR from storage and place in tool carrier	3
4.	Remove coupler tool from storage and place in tool carrier	2
5.	Translate along cargo bay	5
6.	Tether to TBD structure and translate to center of SFHT structure	2
7.	Remove PFR from tool carrier	1
8.	Mount PFR	2
9.	Ingress into PFR support using handhold	1
10.	Tether tool carrier	1
11.	Loosen transfer line coupler tiedowns	3
12.	Tether transfer line to AXAF length	1
13.	Decouple coupler cover from cradle	5
14.	Verify decoupled coupler (IVA)	1
15.	Tether to TBD structure and translate to center of SFHT/AXAF inter-connect	3
16.	Couple coupler to AXAF mate	5
17.	Verify coupler mated (IVA)	1
18.	Remove coupler tool from tool carrier	1
19.	Torque coupler to completed mating	3
20.	Verify manually coupler is mated	2
21.	Verify coupler mating complete (IVA)	1
22.	Remove Astronaut tether	1
23.	Translate along AXAF/SFHT to cargo bay	2
24.	Translate along cargo bay to AFD	5
25.	Ingress to airlock	--
		52

EVA CONT.

- 0 EVA CONSTRAINTS
  - 0 MECHANICAL
    - 0 OBSTRUCTION OR HINDRANCE OBJECTS, e.g., EXTERNAL MANEUVERING UNIT, SHROUD
    - 0 MASS, BULKINESS - TRANSFER LINE FLEXIBILITY/SPRING
    - 0 INADEQUATE FOOT/HAND RESTRAINTS
    - 0 WORK AREA GEOMETRY - SAFETY PERIMETER
- 0 THERMAL
  - 0 CRYOGENIC SURFACES - TOUCH TEMPERATURES, SPILL
  - 0 SAFETY - RUPTURE HAZARD
  - 0 SOLAR EXPOSURE

SAFETY

- 0 SAFETY HAS BEEN THE MAJOR DESIGN REQUIREMENT
- 0 REFERENCE NHB-1700.7 A/B
  - 0 2 FAILURE TOLERANT FOR SAFETY
  - 0 1 FAILURE TOLERANT FOR MISSION SUCCESS

SFHT/STS PAYLOAD SAFETY REQUIREMENTS APPLICABILITY MATRIX

- THIS FIGURE REPRESENTS A STANDARD JSC FORM USED TO RELATE PAYLOAD ELEMENTS TO REQUIREMENTS. IT IS NOT A COMPLETED FORM BUT IS USED HERE TO ILLUSTRATE ONE OF THE STANDARD FORMS AND PROCEDURES FOLLOWED IN APPLICATION OF SAFETY STANDARDS TO THE SFHT.
- FOR SFHT, THE EMERGENCY RELEASE PYROTECHNIC ELEMENT WAS ADDED (ELEMENT NO.5) ALONG WITH APPLICABLE NHB REQUIREMENT PARAGRAPHS. THE FORM IS PRELIMINARY AND IS EXPECTED TO INCREASE IN NUMBER OF ELEMENTS AS THE PROGRAM PROGRESSES.

SFHT/STS PAYLOAD SAFETY REQUIREMENTS APPLICABILITY MATRIX

1.Payload/Subsystem	2.Date	3.Phase	4.Page___ of___

5. Payload Element	6 NHB 1700.7A Requirements	200 General	202.1 Critical Hazards	202.2 Catastrophic Hazards	202.2A Solid propellant	202.2B Liquid propellant	202.2C Deployment/Sep	202.2D Bay door closure	202.2E Payload RF xmtr	203 Retrieval of payload	204 Hazard detection & saf	205 P/L contingency ret	206 Failure propagation	207 Redundancy sep	208.1,2 & 3 Structural	208.4 & 5 Pressure system	208.6 Decompression	208.7 Sealed containers	209.1 Hazardous container	209.2 Cabin materials	209.3 Flammable material	209.4 Offgassing material	210 Pyrotechnics	211 Destruct systems	212.1 Ionizing radiation	212.2 Nonionizing rad	213 Electrical systems	214 Verification reqmts	215 Hazardous procedures	216 Reflown hardware	217 Extravehicular activity	218 Series payload	219 Flammable atmosphere	7 Safety Analysis by:
1 Cryostats	/	/	/	x	-	-	x	-	-	-	-	/	x	/	x	x	/	-	x	-	x	/	-	-	-	-	/	/	x	-	x	-	x	
2 Dewars	/	/	/	x	-	-	/	-	-	-	-	/	x	-	x	x	/	-	x	-	x	/	-	-	-	-	-	/	/	-	/	-	-	
3 P/L Bay Electronics	/	/	x	x	-	-	/	-	-	-	-	/	x	-	x	-	-	x	/	-	x	x	x	-	-	x	x	/	/	-	/	-	x	
4 Support Structures	/	/	/	x	-	-	x	/	-	/	-	/	x	-	x	-	-	-	-	-	x	/	x	-	-	-	x	/	x	-	/	-	-	
5 Emergency Release	/	/	/	x	-	-	x	-	-	x	x	#	/	-	x	/	-	/	/	-	/	/	x	-	-	/	x	x	x	-	/	-	-	
6 Software	/	/	/	/	-	-	/	-	-	/	-	/	/	-	-	-	-	-	-	-	-	-	x	-	-	-	-	/	/	-	/	-	-	
7 Aft Dk Monitor/Ctr	/	/	/	x	-	-	/	-	-	-	-	/	/	-	/	-	-	-	/	x	x	x	x	-	-	x	x	/	/	-	/	-	-	

8 Legend
- \- not applicable
- x applicable hazard identified
- / applicable no hazard identified
- \# waiver deviation required

9 Implementation personnel date P/L org. personnel date

ORIGINAL PAGE IS
OF POOR QUALITY

SAFETY

THE SEVEN CATEGORIES SHOWN BELOW WILL BE WRITTEN IN PRESCRIBED NASA FORMAT FOR THE PHASE 0 SAFETY REVIEW, AFTER THE FINAL DESIGN HAS BEEN APPROVED, DURING PRELIMINARY DESIGN PHASE B.

A EXAMPLE OF THE REPORT IS SHOWN IN THE TWO VIEWFOILS FOLLOWING THIS ONE.

- CRYOSTAT
- DEWARS
- PAYLOAD BAY AVIONICS
- SUPPORT STRUCTURES
- EMERGENCY RELEASE
- SOFTWARE
- AFD MONITOR/ CONTROLLER

SFHT PAYLOAD HAZARD REPORT — NO. SFHT-D-02

Payload: SFHT — Phase: 0/0

Subsystem: Dewars

Hazard Group: Collision, Explosion, Loss of entry capability, Temperature extremes

Date: 1/20/89

Hazard Title:
Rupture of Cryogen Tank

Applicable Safety Requirements:
NHB 1700.7A, Sections 202.2,206,208.1,2,3,4, 214

Hazard Category:
< X > Catastrophic
<   > Critical

Description of Hazard:
Rupture of the cryogen tank, leading to possible explosion and escape of liquid helium, with damage to STS equipment or other payloads.

Hazard Causes:
1. Overpressure due to inadequate venting capacity
2. Overpressure due to closing of vent lines by incorrect valve placement.
3. Overpressure due to operator error of component failure resulting in air freezing in and blocking vent lines.
4. Overpressure due to excessive heat leak caused by electrical component failure.

Hazard Controls:
1.1 Design dewar to be insulated with closed cell foam.
1.2 Provide two redundant vent paths, each capable of venting boiloff caused by worst case heat load to cryogen tank.
2.1 Design vent lines to passively vent normal boiloff rates without the need to open motor-driven valves,i.e., use check valves for normal venting.
2.2 Use passive overpressure protection (burst discs) to accomodate high rate (failure induced) flow rates.
3.1 Establish procedures which safeguard against undesirable valve states.
3.2 Leak check all line fittings after loads testing and before final fill.
3.3 Ensure one of the two redundant (TBD) high-capacity vent paths is isolated from all other lines and valves.
4.1 Design dewars, cryostats and electronics to minimize excessive heat input due to electrical component failure.

Safety Verification Methods:

1.1.1 Verify capacity of high rate vent lines under guard vacuum loss (worst case) conditions through analysis and test of protoflight dewar.
1.1.2 Verify that closed cell foamed tank reduces vent rates.
2.1.1 Acceptance test all passive pressure relief devices.
2.2.1 Demonstrate reliability of burst discs through random testing of flight burst discs under loads and at both ends of the operational temperature range.
2.2.2 Demonstrate heat rate reductions due to closed cell foam under loss of vacuum conditions.
3.1.1 Approval of procedures by program, carrier, user and STS safety organizations.
3.2.2 Documentation of leak check results.
3.3.1 Documentation of design and analysis.
4.1.1 Analysis of the maximum heat inputs to the cryogen due to failure of electrical components.

Status of Verification:

1.1.1 Open ...
1.1.2 ...

Approval:	Payload Org.:	STS:
Phase 1		
Phase 2		
Phase 3		

THERMAL CONDITIONING

SFHT

THERMAL CONTROL

- A PRELIMINARY THERMAL ANALYSIS OF THE SFHT USING THE LMSC SIMPLIFIED PAYLOAD, ORBITER THERMAL SIMULATOR (SPORT) WAS PERFORMED
- THE THERMAL REQUIREMENTS WERE
  - AVIONICS
    - SURVIVAL - 40^{0} F TO 150^{0} F

      OPERATION - 40^{0} F TO 120^{0} F
  - EVA

    - 181^{0} F TO 235^{0} F
  - CRYOSTAT OUTER SHELL

    - 200^{0} F TO 70^{0} F
  - MINIMIZE TRANSFER LINE AND COUPLER TERMPERATURES
- ALL BETA ANGLE (HOT AND COLD ORBITS)
- ORBITER ALTITUDE MAY BE CONTROLLED DURING RESUPPLY
  - BARBECUE MODE

SFHT

THERMAL CONTROL CONT.

- 0 ALL SFHT COMPONENTS WILL BE MAINTENED WITHIN SPECIFICATIONS BY PASSIVE METHODS
  - 0 MLI
  - 0 BETA CLOTH
  - 0 PAINT
  - 0 RADIATORS
  - 0 THERMAL ISOLATORS
  - 0 FLEXIBLE OPTICAL SOLAR REFLECTORS (FOSR)

HELIUM II
GROUND LOADING

THE SUPERFLUID HELIUM GROUND LOADING FACILITY SHOULD BE LOCATED IN THE HAZARDOUS CARGO FACILITY BUILDING OR ONE SIMILAR TO IT FOR SAFETY. THE LOADING FACILITY EQUIPMENT IS SHOWN ON THE FACING PAGE.

SFHT

HELIUM II GROUND LOADING

- EQUIPMENT
  - LIQUID HELIUM SUPPLY SYSTEM (LHSS)
  - LIQUID HELIUM PUMP-DOWN SYSTEM (LHPDS)
  - GUARD TANK FILL SYSTEM (GTFS)
  - ELECTRICAL CONTROL MODULE (ECM)
  - DATA ACQUISITION SYSTEM (DAS)
  - ENVIRONMENTAL MONITOR SYSTEM (EMS)
  - PORTABLE VACUUM PUMP DOWN STATION (PVPDS)
  - VACUUM JACKETED TRANSFER LINES AND COUPLING

GROUND LOADING SEQUENCE

THE MAJOR EVENTS IN THE LOADING PROCESS ARE SHOWN BELOW. DETAILS INCLUDING VALVE SEQUENCING WILL BE FOUND IN ENGINEERING MEMO 11 "GROUND SFHT LOADING"

SFHT

GROUND LOADING SEQUENCE

- CONNECT GSE AND TRANSFER LINES
- VACUUM PUMP DOWN
  - GUARD TANK
  - PVPDS
  - SFHT DEWAR
  - LHSS
  - LHPDS
- COOLDOWN SFHT TANKS HE-I
- PRODUCE HE-II IN LHSS
- TRANSFER HE-II TO SFHT
- CLOSE SFHT VALVES
- SHUT DOWN LHPDS
- DISCONNECT GSE AND TRANSFER LINES

HELIUM II LOADING FACILITY SCHEMATIC

THE SCHEMATIC OF THE GROUND LOADING FACILITY IS ON THE FACING PAGE

- THE VALVE DESIGNATIONS WITHIN THE MAJOR PUMPDOWN AND HELIUM SUPPLY EQUIPMENTS ARE IDENTIFIED TO AID IN FOLLOWING THE PUMPDOWN, EVACUATION AND FILLING OF THE GUARD TANK WITH HELIUM I, THE PUMPDOWN, EVACUATION AND FILLING OF THE SFHT DEWAR WITH HELIUM II AND THE PRODUCTION OF HeII

SFHT

GROUND LOADING SCHEMATIC

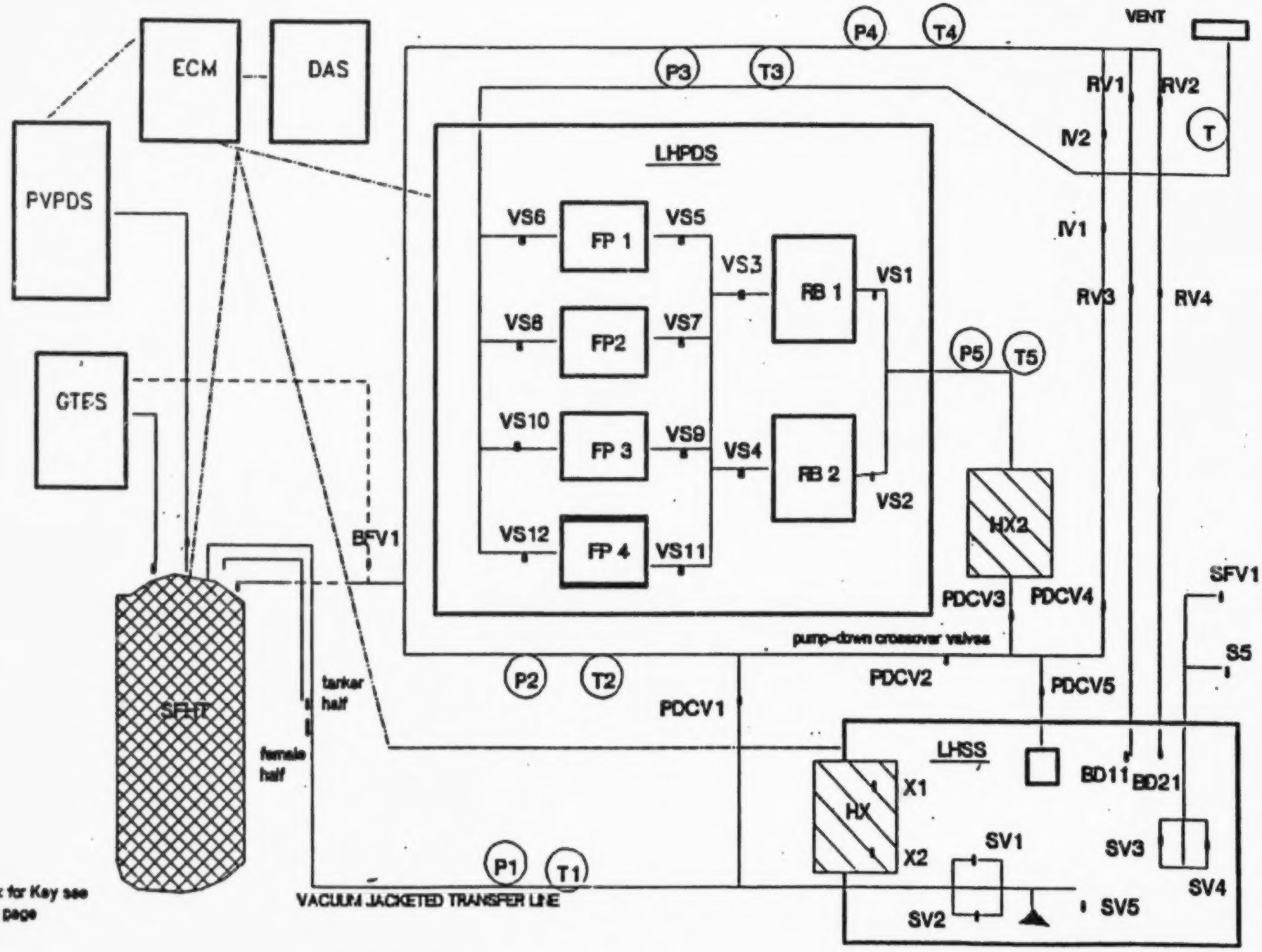

Note: for Key see next page

CAUTION & WARNING

- REQUIREMENT - SFHT AVIONICS SHALL PROVIDE CAUTION AND WARNING TO ENSURE SAFE OPERATION OF THE SFHT AND OF USER SPACECRAFT
- CAUTION CONDITIONS ARE ANY OUT-OF-LIMIT PARAMETER INDICATING A SYSTEM MALFUNCTION AFFECTING THE PRIMARY SFHT MISSION OR RESULTING IN LOSS OF THAT SYSTEM
    - CREW RESPONSE IS REQUIRED WITHIN A REASONABLE TIME
- WARNING CONDITIONS ARE ANY EXISTING, IMPENDING OR MALFUNCTION OF THE SYSTEM THAT AFFECTS CREW SAFETY ADVERSELY OR COMPROMISES THE PRIMARY SFHT MISSION
    - CREW RESPONSE IS REQUIRED IMMEDIATELY

SFHT

CAUTION AND WARNING

- TWO CASES ARE CONSIDERED: GROUND OPERATIONS AND ON-ORBIT OPERATIONS
- PRIMARY CONSIDERATION IS GIVEN TO THE SUPERFLUID HELIUM PARAMETERS OF PRESSURE, TEMPERATURE, VALVES AND USERS (LIMITED)
- GROUND/LAUNCH OPERATIONS SUMMARIZED IN TABLE 1
- ON-ORBIT TRANSFER W/VENTING SUMMARIZED IN TABLE 2

- ALL CAUTION AND WARNING INDICATIONS ALONG WITH ANNUNCIATORS ARE LOCATED IN THE ORBITER AFD STANDARD SWITCH PANEL AREA
    - A SIMILAR ARRANGEMENT IS REQUIRED AT SPACE STATION
    - OMV AND ELV REQUIRE SEPARATE EXAMINATIONS

TABLE 1- CAUTION AND WARNING (C&W) GROUND/LAUNCH OPERATIONS

- THIS TABLE WAS INITIATED TO AID IN IDENTIFYING THOSE SFHT FUNCTIONS THAT ARE TO BE CONSIDERED AS CAUTION AND WARNING CANDIDATES.
- IT LISTS 4 CATEGORIES OF COMPONENTS - PRESSURE SENSORS, TEMPERATURE SENSORS, COLD VALVES AND WARM VALVES - THAT MUST BE CONSIDERED. IT DIFFERS FROM THE ON-ORBIT TABLE BY ADDRESSING THE GUARD TANK, ABSOLUTE PRESSURE RELIEF VALVES AND SOME USER VENTING.
- NOMINAL ON-THE-GROUND VALUES HAVE BEEN LISTED AND ARE PRELIMINARY IN THIS PHASE OF THE PROGRAM.
- THE OUT-OF-TOLERANCE CONDITION IS THE RESPONSE OF THE COMPONENT TO A POTENTIAL FAILURE AND ITS INDICATION HAS BEEN CATEGORIZED AS EITHER A CAUTION AND/OR WARNING STATE.
- THE ECM (SIMILAR TO THE SFHT AVIONICS) WILL PROCESS THE RESPONSE DATA THROUGH DAS AND PROVIDE THE PROPER INDICATION VISUAL AND AUDIBLE, AS APPLICABLE.
- RESPONSE BY GROUND PERSONNEL IS (TBD) DEPENDING ON WHETHER IMMEDIATE OR DELAYED ACTION IS REQUIRED.

SFHT CAUTION & WARNING

TABLE 1 CAUTION & WARNING GROUND/LAUNCH OPERATIONS

O – Open s – system operating
c – closed ⊙ – secondary indicator

no.	component	Nominal values: position	voltage	current	pressure,torr	temp. K	leakage,sccs	Out-of-tolerance condition	type indication: CAUTION	WARNING
	Pressure Sensors									
1	vac shell	s	tbd	–	$<10^{-7}$	–	–	plumbing leak,vac shell leak		X
2	pri tank	s	1 v	–	28 – 128	–	–	hi heat loads		X
3	Guard tank	s		–		–	–	failed comp. vac leak,burst disc rupture⊙	X	X ⊙
4	em vent line 1	s	1 v	–	$<10^{-7}$	–	–	failed comp. vac leak,burst disc rupture⊙	X	X ⊙
5	em vent line 2	s	1 v	–	$<10^{-7}$	–	–			
	Temperature Sensors									
6	pri tank line	s	–	1ua	–	$1.3 \le x \le 1.9$	–	instrument failure,bath >1.9K, T/t >		X
	Valves, cold									
7	orbital vent (2)	c,c	–	–	–	–	$<10^{-9}$	failed open, leakage $> 10^{-9}$	X	
8	hi flow vent (2)	o,c	–	–	–	–	$<10^{-9}$	failed open, leakage $> 10^{-9}$	X	
9	fep outlet (2)	o,c	–	–	–	–	$<10^{-9}$	failed open, leakage $> 10^{-9}$	X	
	Valves, warm									
10	Guard tank NBP vent	o – c	–	–	–	–	$<10^{-5}$	failed closed		X
10a	Absolute press relief	c – o	–	–	–	–	–	launch conditions,fails to open at press	X	
	PL press. sens									
11	orbital vent	s	1V	–	$<10^{-5}$	–	–	failed component, valve leak	X	
12	hi flow vent	s	1V	–	$<10^{-5}$	–	–	failed component, valve leak	X	
13	Flow meter inlet	s	1V	–	$<10^{-5}$	–	–	failed component, valve leak	X	

TABLE 2 ON-ORBIT TRANSFER W/VENTING (RECEIVER NOT INCLUDED)

- O THIS TABLE WAS INITIATED TO PROVIDE GUIDELINES FOR THE CAUTION AND WARNING REQUIREMENTS FOR SFHT.
- O IT LISTS 4 CATEGORIES OF COMPONENTS - PRESSURE SENSORS, TEMPERATURE SENSORS, COLD VALVES AND WARM VALVES - THAT MUST BE REVIEWED AS TO THEIR IMPACE ON CAUTION AND WARNING. IT DIFFERS FROM TABLE 1 BY INCLUDING FLOW METERS AND ADDITIONAL VENTING.
- O NOMINAL ON-ORBIT VALUES HAVE BEEN ENTERED AND ARE TO BE CONSIDERED GUIDES IN THIS PHASE OF THE PROGRAM. THIS APPLIES TO THE OUT-OF-TOLERANCE CONDITION,ALSO, AND WILL BE CRITICALLY EVALUATED PRIOR TO AND DURING HARDWARE SELECTION PHASES.
- O THESE CAUTION AND WARNING INDICATIONS ARE TO BE IMPLEMENTED IN THE SFHT WITH VISUAL AND AUDIBLE RESPONSES APPEARING IN THE AFD (ORBITER), MSC OR CSF (SPACE STATION) AND HOST FOR OMV AS APPLICABLE.
- O USER CAUTION AND WARNING IMPLICATIONS ARE (TBD)

SFHT

CAUTION & WARNING

TABLE 2 ON-ORBIT TRANSFER W/VENTING (RECEIVER NOT INCLUDED)

O – Open s – system operating
c – closed ⊙ – secondary indicator

no.	component	Nominal values						Out-of-tolerance condition	type indication	
		position	voltage	current	pressure,torr	temp, K	leakage,sccs		CAUTION	WARNING
	Pressure Sensors									
1	vac shell	s	tbd	–	<10 -7	–	–	Plumbing leak,failed component(f.c.)		X
2	pri tank	s	1 v	–	28 – 128	–	–	Hi heat loads,failed component		X
3	Flowmeter inlet	s	1 v	–	tbd	–	–	Press. inconsistent w/flow,f.c.	X	
4	Transfer line	s	1 v	–	tbd	–	–	Press. inconsistent w/flow,f.c.	X	
5	orbital vent	s	1 v	–	<10 -7	–	–	Leakage past valves,f.c.	X	
6	em vent line 1	s	1 v	–	<10 -7	–	–	f.c.,burst disc rupture ⊙	X	X ⊙
7	em vent line 2	s	1 v	–	<10 -7	–	–	f.c.,burst disc rupture ⊙	X	X ⊙
	Temperature Sensors									
8	pri tank line	s	–	1ua	–	1.3</= x</=1.9	–	instr. fails,FEP heatloads bath >/= 1.9 T/t =		X
9	transfer line	s	–	1ua	–	1.3</= x </=1.9	–	fluid temp too hi,hi-heat loads,hi-back press	X	
19	coupler	o	–	–	–	–	<10 -4	failed seal	X	
	Valves, cold									
10	orbital vent (2)	c,c	–	–	–	–	<10 -9	leakage >10 -9, failed open	X	
11	hi flow vent (2)	o,c	–	–	–	–	–	position indic show inconsistent valve pos	X	
12	fep outlet (2)	o,c	–	–	–	–	–	position indic show inconsistent valve pos	X	
13	fill valve(2)	o,c	–	–	–	–	–	position indic show inconsistent valve pos	X	
14	line dump (2)	c,c	–	–	–	–	<10 -9	leakage >10 -9,failed open	X	
15	Transfer valve (2)	o,c	–	–	–	–	–	position indic show inconsistent valve pos	X	
	Valves, warm									
16	hi flow vent	o	–	–	–	–	–	fails closed		X
17	orbital vent	c	–	–	–	–	<10 -5	leakage >10 -5,failed open	X	
18	cross-over valve	c	–	–	–	–	<10 -5	leakage >10 -5,failed open	X	

COMMONALITY

COMMONALITY OF THE SFHT WITH GENERIC SUBCRITICAL TANKERS HAS BEEN CLASSIFIED IN THREE CATEGORIES AS SHOWN ON THE FACING PAGE

SFHT

COMMONALITY

CATEGORY 1 - USEFUL ONLY FOR HE-II

1. porous plug phase separator
2. fountain effect pump
3. level detector
4. mass gauging

CATEGORY 2 - REQUIRES MODIFICATION

1. flow meter
2. liquid acquisition system
3. support system
4. avionics

CATEGORY 3 - COULD BE USED IN OTHER GRYOGENIC TANKERS

1. valves (cold, warm, pyro, relief, etc.)
2. cryogen tank
3. insulation
4. vapor-cooled shields
5. transfer line
6. vacuum shell
7. docking system

SUMMARY
AND
CONCLUSIONS

SFHT

SUMMARY

- THE BASELINE CONCEPT FOR THE SUPERFLUID HELIUM TANKER WILL MEET ALL NASA REQUIREMENTS
- THE BASELINE SUPERFLUID HELIUM TANKER CONCEPT IS FLEXIBLE AND ADAPTABLE
- THE CONCEPT HAS LOW UP-FRONT COST AND LOW LIFE-CYCLE-COSTS

SFHT

CONCLUSION

- THE BASELINE CONCEPT HAS NOT UNCOVERED ANY PROBLEM AREAS ASSUMING THAT THE SHOOT SUPERFLUID HELIUM COMPONENTS (i.e. RELIEF VALVES, ETC) CAN MEET SPECIFICATIONS

- THE SFHT SHOULD PROCEED INTO DETAILED PRELIMINARY DESIGN

★ U.S. GOVERNMENT PRINTING OFFICE: 1988—561-009/60829